R-410A

ACMR Series

Air Cooled Packaged Chillers

Range 8 TR to 280 TR
(28 kW to 984 kW)

اجهزة تكييف هواء
AIR CONDITIONING EQUIPMENT

you name it
we cool it

ISO 9001
BUREAU VERITAS
Certification

CE

facebook.com/skmuae

www.skm.ae

youtube.com/marketingskm

Sharjah Economic Excellence
Award winner

SKM Air Cooled Packaged Chillers ACMR Series - R410A

Contents

Legend

The following legends are used throughout this manual:

cfm..... Cubic feet per minute
EER ..... Energy Efficiency Ratio
Hz ..... Hertz
kW ..... Kilowatts
kg..... Kilogram
lbs..... Pounds
l/s..... Liters per second
ft.wg ..... feet of water gauge
Ph ..... Phase
Pi ..... Power Input of Compressor
TR..... Tons of Refrigeration
WPD ..... Water Pressure Drop
WFR ..... Water Flow Rate
V ..... Volts

Nomenclature

AC M R - 5 045 Y

Air Cooled Packaged Chillers

Hermetic Scroll Compressor

R-410A

Power Supply Frequency
5 : 50 Hz
6 : 60 Hz

Unit Size

Power Supply Code

Y : 380- 415V/3Ph/50Hz
P : 440V/3Ph/50Hz (Consult SKM)
R : 380V/3Ph/60Hz
E : 460V/3Ph/60Hz
T : 220V/3Ph/60Hz (Consult SKM)

SKM reserves the right to change, in part or in whole the specifications of its Air Conditioning Equipment at any time in order to add the latest technology. Therefore, the enclosed information may change without any prior notice.

Introduction

SKM ACMR Air-Cooled Package Chillers utilize Scroll Compressors and R410A refrigerant, designed to meet customer's demand for environment friendly chiller coupled with minimal noise and vibration all put together in a compact construction. By design, ACMR Chillers are suitable for vast range of applications such as free standing retail outlets, shopping centers, villas, high rise buildings and cooling applications of modern manufacturing industries. Traditional to all SKM chillers, ACMR are designed and manufactured to provide the utmost performance, efficiency, reliability and to meet requirements of Gulf's severe climatic condition.

ACMR Chillers are assembled, leak tested, evacuated, internally wired and fully charged with R410A refrigerant. Every unit is fully tested and is ready for installation.

ACMR Chillers are designed and manufactured as per SKM Quality, Environment, Occupational, Health and Safety Management Systems that confirms with ISO 9001:2008, ISO 14000:2004 and OHSAS 18001:2007. ACMR Chillers are rated on accordance with AHRI 550/590.

ACMR Series Package Air Cooled Scroll Chillers are available in 56 models covering nominal capacity ranges from 8 TR - 280 TR (28 kW to 984 kW).

SKM Airconditioning Equipment,

اجهزة تكييف هواء
AIR CONDITIONING EQUIPMENT

You name it.....We cool it.

General Features

To meet the challenges of today's residential and commercial airconditioning, SKM ACMR Series features a more compact construction for lesser space requirement, lighter in weight to minimize structural load on buildings and with minimal sound & vibration ideal for noise sensitive environment.

ACMR Series have been developed to provide high full load EER that exceeds ASHRAE 90. 1 requirements and to have reduced operating cost. A full function microprocessor control designed to keep the chiller running at the highest energy efficiency level and system protection.

ACMR Series are comprised of models with single compressor for small capacity units and multiple compressors system for higher capacity units. These multiple compressors system offer efficient capacity control, fewer start/stop, reduced starting load and part load capacity if one compressor fails.

Another advantage of ACMR is that it is designed as standard to operate at a wide range of ambient, from 50ºF (10ºC) to 125ºF (52ºC).

Main Component Features

Compressors

Compressors used in ACMR packaged unit series are hermetically sealed, compact scroll with the following features:

- High Efficiency.
- Quiet operation, Low Sound levels.
- Compact and light .
- Limited wear.
- 70% fewer moving parts than comparably sized reciprocating compressors
- Unique ability to handle liquid refrigerant.
- Suction gas motor cooling.
- Suction screen.
- Centrifugal oil pumps with filter and magnet.
- Brazed fittings.

Condenser Coils

Condenser coils are manufacture from seamless Hi-X copper tubes mechanically bonded to aluminum fins to ensure optimum heat transfer. All condenser coils are leak and pressure tested at 715 psig (4930 kPa) and with maximum allowable working pressure of 630 psig (4344 kPa).

Condenser Fans

The condenser fans are propeller type, aluminum alloy blades, directly driven by Totally Enclosed Air Over (TEAO) and class "F" insulation motor. Complete fan assembly is provided with fan guard.

Evaporator

ACMR Evaporator from models 5008/6010 to 5045/6055 are direct expansion Brazed Plate Heat Exchangers (BPHE). Channel plates, refrigerant and water connections are constructed from stainless steel with pure copper as brazing material. Maximum working pressure of water side is 421 psig (2900 kPa) and for refrigerant side is 493 psig (3400 kPa).

For other ACMR models with larger capacity, the evaporators are direct expansion shell and tube. Header, tubesheet, shell, refrigerant and water connections are made of carbon steel. Maximum working pressure of water side is 145 psig (1000kPa) and for refrigerant side is 421 psig (2900kPa).

All Evaporators are insulated with 1 inch (25mm) thick flexible closed cell insulation, K factor 0.28 Btu. In/ft².h.ºF (0.04W/m.ºK).

Expansion Valve

ACMR series chillers use electronic expansion valve for precise control refrigerant mass flow on models 5024~5240 & 6028~6280. Our electronic expansion valve improves EER (Energy Efficiency Ratio) at full & part-load conditions. Also it improves temperature control & increases the range of operating conditions.

For models 5008 ~5020 & 6010~6022 uses thermostatic expansion valves.

Casing/Structure Frame

The unit casing in ACMR Series is made of zinc coated galvanized steel sheets conforming to JIS-G 3302 and ASTM A653 which is phosphatized and baked after an electrostatic powder coat of approximately 60 microns. This finish and coating can pass a 1000 hour in 5% salt spray testing at 95ºF (35ºC) and 95% RH as per ASTM B117.

ACMR series are assembled on rigid structural steel skid channels painted with one coat galvanized primer and one coat black enamel.

Refrigerant Piping

The refrigeration circuit piping is fabricated from ACR grade copper piping. Each refrigeration circuit includes filter drier, liquid line solenoid valve, thermostatic expansion valve, sight glass and shut off vale. Suction line is insulated with ½ inch (13mm) wall thickness closed cell pipe insulation.

Refrigerant R- 410A

Why 410A?

R410A has a higher volumetric cooling capacity compared to R22 and has better thermal exchange properties. This results in overall performance gains in terms of system efficiency. The greater density of the vapour in R410A permits higher system velocities, reduces pressure drop losses and allows smaller diameter tubing to be used. In other words a smaller unit can be developed using a smaller displacement compressor, less coil and less refrigerant while maintaining system efficiencies comparable to current day R22 equipment.

Benefits

- **No ozone depletion potential or phase-out date.**

Using chlorine-free R-410A with zero Ozone Depletion Potential (ODP) helps protect both the environment and your investment. That's because new equipment using R-410A faces no mandated phase-out date over a 20 to 30 year equipment life expectancy.

- **Reduced service costs.**

R-410A refrigerant has no significant "glide." If a leak occurs, only the lost refrigerant must be replaced.

Attention points

- Pressure level: 1.6 times of R22.
- Lubricating oil: Ester Oil absorb moisture easily (Never mix with mineral oil).
- Tools exclusive for R410A
- Never mix R410A with other refrigerant
- Driers, valves and even copper tube must be approved for use with R410A.
- Never expose refrigerant cylinders to high temperatures that may reach the surface temperature to 60°C.

Control Panel

The unit mounted chiller control panel enclosure is fabricated out of heavy gauge sheet steel in phosphatized powder coated baked finish. The enclosure conforms to IP54 as per guidelines in IEC 529. A hinged access door and key-fastener is provided for easy access and security. The panel is factory wired in accordance with NEC 430 & 440, labeled, tagged and features 220V / 240V controls.

- All compressors are DOL start as standard.
- Individual compressor and condenser fan motor contactors.
- Thermal magnetic circuit breakers for compressors and condenser fan motors.
- Circuit breaker for control circuit.
- Microprocessor master board with graphical display.
- Microprocessor expansion boards as required.
- Control Relays.
- Control circuit on/off switch.
- Voltage monitoring module for protection against under voltage, over voltage, phase loss, phase reversal and phase unbalance of the incoming voltage.
- Control terminal blocks and power terminal blocks/bus bars.

SKM Microprocessor Controller

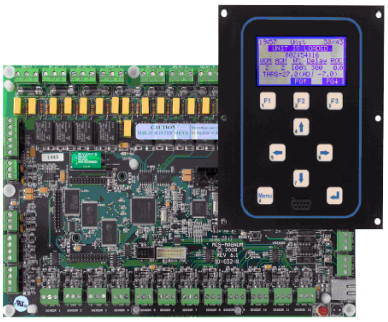

Microprocessor control system is available for ACMR series chiller as a standard feature. Our high energy efficient chiller has a full function microprocessor control unit designed to keep the chiller running at its most energy efficient level. It is a rugged microprocessor based controller that is designed for the hostile environment of HVAC industry.

It provides flexibility with set points and control options that can be selected prior to commissioning a system or when the unit is live and functioning. Displays, alarms and other interfaces are accomplished in a clear and simple language that informs the user as to the status of the system. It is designed to safeguard the system that is being controlled, eliminate the need for manual intervention and to provide a simple but meaningful man-machine-interface.

This controller provides complete operational control for the chiller and has built-in auto diagnostic capability that can signal normal operation or alarm conditions as well as shutting down the chiller or system, if necessary.

The Main Features of the controller are as follows:

- A large graphical LCD Display (2.8″ diagonal) with back-lit that can be seen in bright or dim lighting.
- A nine button generic keypad that is so user friendly, it rarely requires a reference manual.
- Multiple authorization levels to provide tight security of the control system.
- Two operating schedules per each day of the week and 8 holidays.
- The system provides 'last time' enabled & disabled, number of cycles, and total run hours.
- Automatic Lead/Lag changeover of the compressors.
- Capacity control based on leaving chilled water temperature. A special control zone based on leaving water temperature that reduces compressor cycling, and improved unit part load efficiency.

Display Information

SKM ACMR chillers offer a graphics LCD display which allows the operator to access different parameters of the chiller. Operator can view and change the set point of chiller parameters. The graphical display has lot of features, trending is one of the key features of graphical display, which shows last 25 samples with an appropriate scale to allow it to fit on the display.

The well designed keypad with three function keys, four direction keys and two selection keys allows the operator to navigate through different Menu, such as:

- Status
- Outputs
- Inputs
- Alarms
- Graphs
- Set point
- Service tools
- Lockout Reset
- Lockout Alarm
- Password

System Control Philosophy

The unit may be enabled or disabled through the control circuit ON/OFF switch.

Control is based upon leaving chilled water temperature. How fast the temperature changes is calculated and capacity decisions are based upon the rate, the current temperature, and the control temperature zone. Capacity is never added if the system is moving toward the temperature target at an acceptable rate. The unit will monitor all control functions and stage the compressor to maintain the required operating capacity.

Easy Accessible Measurements Include:

- Status of the chiller.
- Status of each circuit/compressor.
- Status of condenser fans.
- Leaving and Entering chilled water temperature.
- Suction pressure for each refrigerant circuit.
- Discharge pressure for each refrigerant circuit.
- All active set points.
- Run time for each compressor.
- Number of compressor starts.
- Lockout and alarm status.
- Status of water flow switch, compressor internal motor protector, ON/OFF.
- Log of last 100 alarms.
- Lead compressor identification.
- Date and time.
- Graphs of all inputs and outputs.

System Protection

The following system protection controls will automatically act to insure system reliability and protection of the unit.

- Low suction pressure protection.
- High discharge pressure protection.
- Low discharge pressure protection.
- Compressor internal thermal protection.
- Freeze protection.
- Chilled water flow loss protection.
- Sensor error protection.
- Anti-recycle.
- Time delay between stages.
- 4-Levels of passwords to restrict the intentional mishandling.

Optional Features available for the Micro Controller

PC Support Software

PC software to communicate with ACMR microprocessor is available as an optional feature. Software is named **MCS-Connect** and it can provide both local and remote communications to the chiller microprocessor. This program allows viewing the entire status of chiller, inputs, outputs, set points, alarms, graphs etc. Through proper authorization, changes can be made to the system. Configuration files can be transmitted to or received from the unit. Communication between PC and chiller microprocessor can be made through RS-232 serial port or Ethernet port.

If there is more than one chiller, these chillers can be connected together via Rs-485 network which can support up to 20 chillers. Access to this network can be local, via RS 232 or Ethernet connection, or remote via 14.4K Baud modem. Each chiller in the network must be assigned to a unique address. This address can be changed from the LCD/keypad of the unit or through **MCS-Connect** software. RS 232 transmission should not exceed 50 feet in length and RS 485 transmission should not exceed 1 mile without repeater. For Ethernet communication, it is necessary to use a crossover cable when connected directly to a PC.

This software can run with Windows 2000 or newer version.

Factory Installed Options

Condensor Coil Options

- Condenser Coil With Copper Fins **(FC)**.
- Condenser coil with precoated aluminum fins **(FAP)**.
- Condensor Coil with Aries Coated Aluminium Fins **(FAA)**.
- Condensor Coil with Aries Coated Copper Fins **(FCA)**.
- ElectroTinned Copper Fins for Condenser Coil **(CFT)**.
- Fully Electrotinned Condenser coils with copper fins **(FCT)**.

Hot Dipped Galvanized Steel Frame and Base (GFB)

Evaporator Casing

- Evaporator enclosed in a casing of Aluminium and injected with polyurethane foam. (Available for Shell & Tube Evaporators only) **(ECA)**.
- Evaporator enclosed in a casing of Galvanized Steel and injected with polyurethane foam.(Available for Shell & Tube Evaporators only) **(ECG)**.
- Evaporator enclosed in a casing of Stainless Steel(304) and injected with polyurethane foam. (Available for Shell & Tube Evaporators only) **(ECS)**.

Condenser Coil Guard (CGP)

CGalvanized wire mesh guard with painted finish for condenser coils. Recommended on ground level installations where coil needs to be protected against vandalism.

Low noise Fan and motor assembly (LNF)

Can be provided for applications where minimal unit sound is required. For ACMR models 5050 to 5240.

Pressure Relief Valve (PRV)

To protect the chiller from hi-pressure in the event of failure of primary high pressure safety mechanisims.

Marine Paint (MP)

Marine Painting on casing and steel structure, to improve corrosion resistance in coastal environments and off-shore locations.

Compressor Sound Jacket (CSJ)

Compressor acoustic hood to reduce sound

ASME Stamped Evaporator (STE)

BPHE and Shell & Tube evaporator with ASME stamp.

Pressure Gauges (SDG1)

Suction & discharge pressure indication of each refrigerant circuit. Gauges are mounted outside the Control Panel

Extra Shut Off Valve (XFV)

Extra Shut off valve in liquid line to fully isolate the filter drier.

Rotalock Valves on Compressors (RVC)

For additional faciliation of maintenance of units

Electronic Expansion Valve (EEV)

To provide energy saving benefi ts over mechanical thermostatic expansion valve. (For models with TXV)

Ammeter & Phase Selector switch (AMPC)

To indicate running AMPS of each compressor.

Ammeter & Phase Selector switch (AMPI)

To indicate running AMPS on main incomer of a chiller.

BMS Interface thru protocol (BMSP)

For interacting the units with major BMS protocols such as BACNet, Modbus or LON. Extra hardware may be required depending on the protocol.

BMS interface volt free contacts (BMVF)

BMS interface volt free contacts for Run status, Common fault status, Auto mode status and provision for Remote On/Off. For additional requirements, consult SKM.

Condenser Fan Motors with built-in Anti-Condensation Heaters. (CFMA)

Where application so requires.

Voltage Monitoring Module as per DEWA (DVM)

Under voltage relay with Time delay relay, as per DWEA specification. This option is available for Dubai, UAE only.

Evaporator Freeze Up Protection (EFP)

Heating cable with thermostat to prevent Evaporator Freeze-up where low ambient below 32ºF (0ºC) are anticipated with/out chiller operation.

IP55 Control Panel Enclosure (ICP)

Control Panel for special applications to meet IP55 requirements.

Independent refrigeration circuit (IRC)

For independent refrigeration circuits other than standard arrangement shown, consult SKM.

Independent refrigeration circuit with EEV (IRC+EEV)

For independent refrigeration circuits other than standard arrangement shown, consult SKM with Electronic Expansion Valve

Main Isolator (without door interlock) (ISO)

For main power isolation.

Low Ambient Operation Kit (LAO)

Low Ambient Operation kit for unit operation down to lower than normal Gulf ambient temperature condition. Specify temperature during the time of order

Soft Starter (SFS)

To reduce the starting current of compressors using reduced voltage starting method. Compressors will be started using electronic solid state soft starters that will ramp up the speed of the compressors to rated speed within few seconds thus reducing the mechanical & electrical stresses .

Voltmeter & Selector Switch (VSS)

To monitor incoming line voltage

Options For Field Installation

Chilled Water Flow Switch (CWFS)

To control the chilled water flow.

Anti-vibration mounts, spring type (CAVM)

Recommended for roof mounted units or other locations in the vicinity of occupied spaces, where noise/vibration may be objectionable. Can be supplied loose for site installation.

Hi-Lo Pressure Gauges-Loose (CSDG1)

Without piping or isolating pet cocks.

ENGINEERING SPECIFICATIONS - 50 Hz

Model	ACMR	5008	5012	5016	5020	5024	5030	5040
Nom. Cooling Capacity (IP)	TR	7.9	11.5	14.7	18.5	23.7	30.2	39.9
Nom. Cooling Capacity (SI)	kW	27.9	40.5	51.9	65.4	83.3	106.7	141.1
Compressor	-	Hermetic Scroll Compressor						
Qty	#	1	1	1	1	2	2	4
Refrigerant Ciruits	#	1	1	1	1	1	1	2
Oil Charge	US Gal	0.9	0.9	1.2	1.8	1.8	2.5	1.8 / 1.8
Ckt (A / B / C / D)	Litre	3.4	3.4	4.7	6.8	6.8	9.4	6.8/6.8
Condenser Coil	-	Air Cooled 2, 3 or 4 rows, 14 fpi or 16fpi (1.8mm or 1.6mm) fin spacing, copper tubes Aluminum fins						
Face Area (Total)	ft²	16.7	16.7	29.3	29.3	40.0	53.3	64.0
	m²	1.55	1.55	2.73	2.73	3.72	4.96	5.95
Condenser Fan and Motor	-	Propeller Direct Drive, Totally enclosed air over, Class F insulation, 6 pole, IP - 55 protected						
Size x Quantity	kW x #	0.37 x 2	0.37 x 2	0.75 x 2	1.1 x 2	1.1 x 3	1.5 x 3	1.5 x 4
Code x Quantity	- x #	628 x 2	628 x 2	723 x 2	729 x 2	729 x 3	823 x 3	823 x 4
Air Flow Rate	cfm	9,038	8,570	13,834	15,064	22,338	27,915	36,476
	l/s	4,265	4,044	6,528	7,109	10,541	13,173	17,213
Evaporator	-	Direct Expansion Brazed Plate Heat Exchangers						
Qty	#	1	1	1	1	1	1	1
Water Volume	US Gal	0.5	0.8	1.1	1.4	1.8	2.3	2.5
	Litre	2.0	3.1	4.0	5.3	6.7	8.7	9.3
Expansion Valve Type	-	TXV	TXV	TXV	TXV	EEV	EEV	EEV
Refrigerant Charge	lbs	8	12	14	21	29	38	47
	kg	4	5	6	9	13	17	21

Model	ACMR	5090	5095	5110	5120	5130	5140	5155
Nom. Cooling Capacity (IP)	TR	90.7	95.4	107.9	120.7	132.8	140.5	155.4
Nom. Cooling Capacity (SI)	kW	320.4	336.7	380.8	426.4	468.5	495.3	549.2
Compressor	-	Hermetic Scroll Compressor						
Qty	#	3	4	4	4	6	6	6
Refrigerant Ciruits	#	3	2	2	2	3	3	3
Oil Charge	US Gal	1.7 / 1.7 / 1.7	3.3 / 3.3	3.3 / 3.3	3.3 / 3.3	3.3 / 3.3 / 3.6	3.3 / 3.3 / 3.3	3.3 / 3.3 / 3.3
Ckt (A / B / C / D)	Litre	6.3/6.3/6.3	12.6/12.6	12.6/12.6	12.6/12.6	12.6/12.6/13.6	12.6/12.6/12.6	12.6/12.6/12.6
Condenser Coil	-	Air Cooled 2, 3 or 4 rows, 14 fpi or 16fpi (1.8mm or 1.6mm) fin spacing, copper tubes Aluminum fins						
Face Area (Total)	ft²	136.5	182.0	182.0	182.0	273.0	273.0	273.0
	m²	12.69	16.92	16.92	16.92	25.38	25.38	25.38
Condenser Fan and Motor	-	Propeller Direct Drive, Totally enclosed air over, Class F insulation, 6 pole, IP - 55 protected						
Size x Quantity	kW x #	1.5 x 6	1.5 x 8	1.5 x 8	1.5 x 8	1.5 x 12	1.5 x 12	1.5 x 12
Code x Quantity	- x #	TFE805CJ x 6	TFE805CJ x 8	TFE805CJ x 8	TFE805CJ x 8	TFE805CJ x 12	TFE805CJ x 12	TFE805CJ x 12
Air Flow Rate	cfm	65,124	90,416	88,608	86,832	135,624	135,624	133,824
	l/s	30,732	42,667	41,814	40,976	64,001	64,001	63,152
Evaporator	-	Direct Expansion Shell & Tube						
Qty	#	1	1	1	1	1	1	1
Water Volume	US Gal	25.6	25.6	25.6	27.7	31.7	31.7	34.3
	Litre	97.0	97.0	97.0	105.0	120.0	120.0	130.0
Expansion Valve Type	-	EEV	EEV	EEV	EEV	EEV	EEV	EEV
Refrigerant Charge	lbs	101	96	114	133	139	141	162
	kg	46	44	52	60	63	64	73

Table 1

Notes :

Nominal Cooling Capacity (IP) are based on standard AHRI 550/590 conditions of 95ºF ambient, 44ºF leaving chilled water temperature, 10ºF evaporator range and 0.0001 ft².hºF/Btu fouling factor.

Nominal Cooling Capacity (SI) are based on standard conditions of 35ºC ambient, 7ºC leaving chilled water temperature, 5ºC evaporator range and 0.018 m².ºC/kW fouling factor

ENGINEERING SPECIFICATIONS - 50 Hz

Model	ACMR	5045	5050	5055	5060	5070	5075	5085
Nom. Cooling Capacity (IP)	TR	46.2	47.8	54.0	60.4	71.1	77.1	84.9
Nom. Cooling Capacity (SI)	kW	163.6	169.1	190.7	213.5	250.9	271.9	300.2
Compressor	-	Hermetic Scroll Compressor						
Qty	#	4	2	2	2	3	3	3
Refrigerant Ciruits	#	2	1	1	1	3	3	3
Oil Charge	US Gal	1.8 / 1.8	3.3	3.3	3.3	1.7 / 1.7 / 1.7	1.7 / 1.7 / 1.7	1.7 / 1.7 / 1.7
Ckt (A / B / C / D)	Litre	6.8/6.8	12.6	12.6	12.6	6.3/6.3/6.3	6.3/6.3/6.3	6.3/6.3/6.3
Condenser Coil	-	Air Cooled 2, 3 or 4 rows, 14 fpi or 16fpi (1.8mm or 1.6mm) fin spacing, copper tubes Aluminum fins						
Face Area (Total)	ft²	72.0	91.0	91.0	91.0	136.5	136.5	136.5
	m²	6.69	8.46	8.46	8.46	12.69	12.69	12.69
Condenser Fan and Motor	-	Propeller Direct Drive, Totally enclosed air over, Class F insulation, 6 pole, IP - 55 protected						
Size x Quantity	kW x #	1.5 x 4	1.5 x 4	1.5 x 4	1.5 x 4	1.5 x 6	1.5 x 6	1.5 x 6
Code x Quantity	- x #	823 x 4	TFE805CJ x 4	TFE805CJ x 4	TFE805CJ x 4	TFE805CJ x 6	TFE805CJ x 6	TFE805CJ x 6
Air Flow Rate	cfm	37,300	45,208	44,304	43,416	67,812	66,912	66,012
	l/s	17,602	21,334	20,907	20,488	32,000	31,576	31,151
Evaporator	-	DX BPHE	Direct Expansion Shell & Tube					
Qty	#	1	1	1	1	1	1	1
Water Volume	US Gal	2.9	12.4	12.4	12.4	19.0	19.0	25.6
	Litre	11.0	47.0	47.0	47.0	72.0	72.0	97.0
Expansion Valve Type	-	EEV	EEV	EEV	EEV	EEV	EEV	EEV
Refrigerant Charge	lbs	52	48	57	72	71	80	92
	kg	24	22	26	33	32	36	42

Model	ACMR	5165	5180	5190	5205	5215	5230	5240
Nom. Cooling Capacity (IP)	TR	166.5	180.6	190.8	204.2	215.9	230.3	241.5
Nom. Cooling Capacity (SI)	kW	587.9	637.2	673.4	720.6	761.6	813.5	852.8
Compressor	-	Hermetic Scroll Compressor						
Qty	#	6	6	8	8	8	8	8
Refrigerant Ciruits	#	3	3	4	4	4	4	4
Oil Charge	US Gal	3.3 / 3.3 / 3.3	3.3 / 3.3 / 3.3	3.3 / 3.3 / 3.3 / 3.3	3.3 / 3.3 / 3.3 / 3.3	3.3 / 3.3 / 3.3 / 3.3	3.3 / 3.3 / 3.3 / 3.3	3.3 / 3.3 / 3.3 / 3.3
Ckt (A / B / C / D)	Litre	12.6/12.6/12.6	12.6/12.6/12.6	12.6/12.6/12.6/12.6	12.6/12.6/12.6/12.6	12.6/12.6/12.6/12.6	12.6/12.6/12.6/12.6	12.6/12.6/12.6/12.6
Condenser Coil	-	Air Cooled 2, 3 or 4 rows, 14 fpi or 16fpi (1.8mm or 1.6mm) fin spacing, copper tubes Aluminum fins						
Face Area (Total)	ft²	273.0	273.0	364.0	364.0	364.0	364.0	364.0
	m²	25.38	25.38	33.83	33.83	33.83	33.83	33.83
Condenser Fan and Motor	-	Propeller Direct Drive, Totally enclosed air over, Class F insulation, 6 pole, IP - 55 protected						
Size x Quantity	kW x #	1.5 x 12	1.5 x 12	1.5 x 16	1.5 x 16	1.5 x 16	1.5 x 16	1.5 x 16
Code x Quantity	- x #	TFE805CJ x 12	TFE805CJ x 12	TFE805CJ x 16	TFE805CJ x 16	TFE805CJ x 16	TFE805CJ x 16	TFE805CJ x 16
Air Flow Rate	cfm	132,024	130,248	180,832	179,008	177,216	175,456	173,664
	l/s	62,302	61,464	85,335	84,474	83,628	82,798	81,952
Evaporator	-	Direct Expansion Shell & Tube						
Qty	#	1	1	2	2	2	2	2
Water Volume	US Gal	34.3	37.2	51.2	51.2	51.2	55.5	55.5
	Litre	130.0	141.0	194.0	194.0	194.0	210.0	210.0
Expansion Valve Type	-	EEV	EEV	EEV	EEV	EEV	EEV	EEV
Refrigerant Charge	lbs	180	199	192	210	228	248	266
	kg	82	90	87	95	104	113	121

Table 2

Notes :

Nominal Cooling Capacity (IP) are based on standard AHRI 550/590 conditions of 95ºF ambient, 44ºF leaving chilled water temperature, 10ºF evaporator range and 0.0001 ft².hºF/Btu fouling factor.

Nominal Cooling Capacity (SI) are based on standard conditions of 35ºC ambient, 7ºC leaving chilled water temperature, 5ºC evaporator range and 0.018 m².ºC/kW fouling factor

ENGINEERING SPECIFICATIONS - 60 Hz

Model	ACMR	6010	6014	6018	6022	6028	6035	6045
Nom. Cooling Capacity (IP)	TR	9.6	14.1	18.0	22.9	28.5	36.4	47.0
Nom. Cooling Capacity (SI)	kW	33.8	49.9	63.7	80.8	100.7	128.8	166.5
Compressor	-	Hermetic Scroll Compressor						
Qty	#	1	1	1	1	2	2	4
Refrigerant Ciruits	#	1	1	1	1	1	1	2
Oil Charge	US Gal	0.9	0.9	1.2	1.8	1.8	2.5	1.8 / 1.8
Ckt (A / B / C / D)	Litre	3.4	3.4	4.7	6.8	6.8	9.4	6.8/6.8
Condenser Coil	-	Air Cooled 2, 3 or 4 rows, 14 fpi or 16fpi (1.8mm or 1.6mm) fin spacing, copper tubes Aluminum fins						
Face Area (Total)	ft²	16.7	16.7	29.3	29.3	40.0	53.3	64.0
	m²	1.55	1.55	2.73	2.73	3.72	4.96	5.95
Condenser Fan and Motor	-	Propeller Direct Drive, Totally enclosed air over, Class F insulation, 6 pole, IP - 55 protected						
Size x Quantity	kW x #	0.55 x 2	1.1 x 2	1.1 x 2	2.2 x 2	2.2 x 3	2.2 x 3	2.2 x 4
Code x Quantity	- x #	628 x 2	723 x 2	723 x 2	823 x 2	823 x 3	829a x 3	823 x 4
Air Flow Rate	cfm	10,970	11,992	16,132	20,802	31,863	38,718	44,404
	l/s	5,177	5,659	7,613	9,816	15,036	18,271	20,954
Evaporator	-	Direct Expansion Brazed Plate Heat Exchangers						
Qty	#	1	1	1	1	1	1	1
Water Volume	US Gal	0.8	1.1	1.4	1.8	2.3	2.7	2.9
	Litre	3.1	4.0	5.3	6.7	8.7	10.4	11.0
Expansion Valve Type	-	TXV	TXV	TXV	TXV	EEV	EEV	EEV
Refrigerant Charge	lbs	8	16	21	27	30	39	48
	kg	4	7	9	12	14	17	22

Model	ACMR	6110	6120	6130	6140	6160	6175	6190
Nom. Cooling Capacity (IP)	TR	108.2	117.7	130.0	140.8	158.4	172.9	188.7
Nom. Cooling Capacity (SI)	kW	382.3	416.0	459.0	496.8	557.4	610.5	665.8
Compressor	-	Hermetic Scroll Compressor						
Qty	#	3	4	4	4	6	6	6
Refrigerant Ciruits	#	3	2	2	2	3	3	3
Oil Charge	US Gal	1.7 / 1.7 / 1.7	3.3 / 3.3	3.3 / 3.3	3.3 / 3.3	3.3 / 3.3 / 3.6	3.3 / 3.3 / 3.3	3.3 / 3.3 / 3.3
Ckt (A / B / C / D)	Litre	6.3/6.3/6.3	12.6/12.6	12.6/12.6	12.6/12.6	12.6/12.6/13.6	12.6/12.6/12.6	12.6/12.6/12.6
Condenser Coil	-	Air Cooled 2, 3 or 4 rows, 14 fpi or 16fpi (1.8mm or 1.6mm) fin spacing, copper tubes Aluminum fins						
Face Area (Total)	ft²	136.5	182.0	182.0	182.0	273.0	273.0	273.0
	m²	12.69	16.92	16.92	16.92	25.38	25.38	25.38
Condenser Fan and Motor	-	Propeller Direct Drive, Totally enclosed air over, Class F insulation, 6 pole, IP - 55 protected						
Size x Quantity	kW x #	2 x 6	2 x 8	2 x 8	2 x 8	2 x 12	2 x 12	2 x 12
Code x Quantity	- x #	TFE805CJ x 6	TFE805CJ x 8	TFE805CJ x 8	TFE805CJ x 8	TFE805CJ x 12	TFE805CJ x 12	TFE805CJ x 12
Air Flow Rate	cfm	75,282	103,432	101,880	100,376	155,148	155,148	153,588
	l/s	35,526	48,810	48,077	47,367	73,214	73,214	72,478
Evaporator	-	Direct Expansion Shell & Tube						
Qty	#	1	1	1	1	1	1	1
Water Volume	US Gal	27.7	27.7	27.7	27.7	31.7	34.3	37.2
	Litre	105.0	105.0	105.0	105.0	120.0	130.0	141.0
Expansion Valve Type	-	EEV	EEV	EEV	EEV	EEV	EEV	EEV
Refrigerant Charge	lbs	128	133	151	169	192	198	217
	kg	58	60	68	77	87	90	99

Table 3

Notes :

Nominal Cooling Capacity (IP) are based on standard AHRI 550/590 conditions of 95ºF ambient, 44ºF leaving chilled water temperature, 10ºF evaporator range and 0.0001 ft².hºF/Btu fouling factor

Nominal Cooling Capacity (SI) are based on standard conditions of 35ºC ambient, 7ºC leaving chilled water temperature, 5ºC evaporator range and 0.018 m².ºC/kW fouling factor

ENGINEERING SPECIFICATIONS - 60 Hz

Model	ACMR	6055	6060	6065	6075	6085	6095	6105
Nom. Cooling Capacity (IP)	TR	55.2	58.9	65.2	73.3	88.4	95.0	102.5
Nom. Cooling Capacity (SI)	kW	195.5	208.1	230.3	258.8	312.3	335.5	362.4
Compressor	-	Hermetic Scroll Compressor						
Qty	#	4	2	2	2	3	3	3
Refrigerant Ciruits	#	2	1	1	1	3	3	3
Oil Charge	US Gal	1.8 / 1.8	3.3	3.3	3.3	1.7 / 1.7 / 1.7	1.7 / 1.7 / 1.7	1.7 / 1.7 / 1.7
Ckt (A / B / C / D)	Litre	6.8/6.8	12.6	12.6	12.6	6.3/6.3/6.3	6.3/6.3/6.3	6.3/6.3/6.3
Condenser Coil	-	Air Cooled 2, 3 or 4 rows, 14 fpi or 16fpi (1.8mm or 1.6mm) fin spacing, copper tubes Aluminum fins						
Face Area (Total)	ft²	72.0	91.0	91.0	91.0	136.5	136.5	136.5
	m²	6.69	8.46	8.46	8.46	12.69	12.69	12.69
Condenser Fan and Motor	-	Propeller Direct Drive, Totally enclosed air over, Class F insulation, 6 pole, IP - 55 protected						
Size x Quantity	kW x #	2.2 x 4	2 x 4	2 x 4	2 x 4	2 x 6	2 x 6	2 x 6
Code x Quantity	- x #	829a x 4	TFE805CJ x 4	TFE805CJ x 4	TFE805CJ x 4	TFE805CJ x 6	TFE805CJ x 6	TFE805CJ x 6
Air Flow Rate	cfm	51,776	51,716	50,940	50,188	77,574	76,794	76,038
	l/s	24,433	24,405	24,039	23,684	36,607	36,239	35,882
Evaporator	-	DX BPHE	Direct Expansion Shell & Tube					
Qty	#	1	1	1	1	1	1	1
Water Volume	US Gal	3.4	15.1	15.1	19.0	25.6	25.6	27.7
	Litre	13.1	57.0	57.0	72.0	97.0	97.0	105.0
Expansion Valve Type	-	EEV	EEV	EEV	EEV	EEV	EEV	EEV
Refrigerant Charge	lbs	53	66	75	94	101	110	120
	kg	24	30	34	43	46	50	54

Model	ACMR	6200	6215	6230	6245	6260	6270	6280
Nom. Cooling Capacity (IP)	TR	199.6	212.4	232.6	248.8	260.0	271.0	281.6
Nom. Cooling Capacity (SI)	kW	703.8	748.2	820.6	878.5	918.0	956.4	993.6
Compressor	-	Hermetic Scroll Compressor						
Qty	#	6	6	8	8	8	8	8
Refrigerant Ciruits	#	3	3	4	4	4	4	4
Oil Charge	US Gal	3.3 / 3.3 / 3.3	3.3 / 3.3 / 3.3	3.3 / 3.3 / 3.3 / 3.3	3.3 / 3.3 / 3.3 / 3.3	3.3 / 3.3 / 3.3 / 3.3	3.3 / 3.3 / 3.3 / 3.3	3.3 / 3.3 / 3.3 / 3.3
Ckt (A / B / C / D)	Litre	12.6/12.6/12.6	12.6/12.6/12.6	12.6/12.6/12.6/12.6	12.6/12.6/12.6/12.6	12.6/12.6/12.6/12.6	12.6/12.6/12.6/12.6	12.6/12.6/12.6/12.6
Condenser Coil	-	Air Cooled 2, 3 or 4 rows, 14 fpi or 16fpi (1.8mm or 1.6mm) fin spacing, copper tubes Aluminum fins						
Face Area (Total)	ft²	273.0	273.0	364.0	364.0	364.0	364.0	364.0
	m²	25.38	25.38	33.83	33.83	33.83	33.83	33.83
Condenser Fan and Motor	-	Propeller Direct Drive, Totally enclosed air over, Class F insulation, 6 pole, IP - 55 protected						
Size x Quantity	kW x #	2 x 12	2 x 12	2 x 16	2 x 16	2 x 16	2 x 16	2 x 16
Code x Quantity	- x #	TFE805CJ x 12	TFE805CJ x 12	TFE805CJ x 16	TFE805CJ x 16	TFE805CJ x 16	TFE805CJ x 16	TFE805CJ x 16
Air Flow Rate	cfm	152,076	150,564	206,864	205,296	203,760	202,256	200,752
	l/s	71,765	71,051	97,619	96,879	96,154	95,445	94,735
Evaporator	-	Direct Expansion Shell & Tube						
Qty	#	1	1	2	2	2	2	2
Water Volume	US Gal	37.2	42.5	51.2	55.5	55.5	55.5	55.5
	Litre	141.0	161.0	194.0	210.0	210.0	210.0	210.0
Expansion Valve Type	-	EEV	EEV	EEV	EEV	EEV	EEV	EEV
Refrigerant Charge	lbs	235	257	264	284	302	320	338
	kg	107	116	120	129	137	145	153

Table 4

Notes :

Nominal Cooling Capacity (IP) are based on standard AHRI 550/590 conditions of 95ºF ambient, 44ºF leaving chilled water temperature, 10ºF evaporator range and 0.0001 ft².hºF/Btu fouling factor

Nominal Cooling Capacity (SI) are based on standard conditions of 35ºC ambient, 7ºC leaving chilled water temperature, 5ºC evaporator range and 0.018 m².ºC/kW fouling factor

CAPACITY RATINGS - 50 Hz (IP)

Model ACMR	LCWT	Condenser Entering Air Temperature °F																			
		95				105				115				118.4				125			
		CCap	PI*	WFR	WPD	CCap	PI*	WFR	WPD	CCap	PI*	WFR	WPD	CCap	PI*	WFR	WPD	CCap	PI*	WFR	WPD
EER	°F	TR	kW	USgpm	ft.wg	TR	kW	USgpm	ft.wg	TR	kW	USgpm	ft.wg	TR	kW	USgpm	ft.wg	TR	kW	USgpm	ft.wg
5008	42	7.7	7.7	18.4	10.3	7.0	8.7	16.9	8.9	6.3	9.9	15.2	7.4	6.1	10.3	14.6	6.9	5.6	11.2	13.4	6.0
11.2	44	7.9	7.7	19.0	11.0	7.3	8.7	17.4	9.4	6.6	9.9	15.7	7.9	6.3	10.3	15.1	7.3	5.8	11.2	13.9	6.4
	45	8.0	7.7	19.3	11.3	7.4	8.8	17.7	9.7	6.7	9.9	16.0	8.1	6.4	10.4	15.4	7.5	5.9	11.3	14.1	6.6
	48	8.4	7.8	20.0	12.1	7.7	8.8	18.4	10.4	6.9	10.0	16.7	8.7	6.7	10.4	16.0	8.1	6.2	11.3	14.8	7.1
5012	42	11.1	12.1	26.7	9.1	10.2	13.4	24.5	7.9	9.3	14.9	22.3	6.7	8.9	15.4	21.5	6.3	8.3	16.5	19.9	5.5
10.6	44	11.5	12.3	27.5	9.7	10.6	13.6	25.3	8.3	9.6	15.0	23.0	7.1	9.3	15.6	22.2	6.6	8.6	16.6	20.6	5.9
	45	11.6	12.3	27.9	9.9	10.7	13.6	25.7	8.5	9.7	15.1	23.3	7.2	9.4	15.6	22.5	6.8	8.7	16.7	20.9	6.0
	48	12.0	12.5	28.9	10.6	11.1	13.8	26.6	9.1	10.1	15.2	24.2	7.7	9.7	15.7	23.3	7.2	9.0	16.7	21.7	6.4
5016	42	14.2	15.4	34.0	8.9	13.1	17.2	31.4	7.7	11.9	19.4	28.6	6.6	11.5	20.2	27.7	6.2	10.8	21.8	25.8	5.5
10.3	44	14.7	15.6	35.2	9.5	13.5	17.4	32.5	8.2	12.4	19.5	29.7	7.0	11.9	20.3	28.7	6.6	11.1	22.0	26.7	5.8
	45	14.9	15.6	35.8	9.7	13.7	17.5	33.0	8.4	12.6	19.6	30.1	7.2	12.1	20.4	29.1	6.8	11.3	22.1	27.2	6.0
	48	15.5	15.9	37.3	10.5	14.3	17.7	34.4	9.1	13.1	19.9	31.4	7.7	12.6	20.7	30.3	7.3	11.8	22.3	28.3	6.4
5020	42	17.8	19.1	42.8	10.7	16.4	21.3	39.4	9.2	15.0	23.7	36.0	7.7	14.5	24.6	34.7	7.2	13.4	26.4	32.3	6.3
10.3	44	18.5	19.3	44.4	11.6	17.1	21.5	41.0	9.9	15.6	23.9	37.3	8.3	15.0	24.8	36.1	7.7	14.0	26.6	33.5	6.7
	45	18.8	19.4	45.2	12.0	17.4	21.6	41.7	10.2	15.8	24.0	38.0	8.6	15.3	24.9	36.7	8.0	14.2	26.8	34.1	7.0
	48	20.1	19.8	48.3	13.6	18.5	21.9	44.5	11.6	16.9	24.4	40.6	9.7	16.1	25.2	38.6	8.8	14.9	27.1	35.9	7.6
5024	42	22.8	22.9	54.8	11.5	21.1	25.4	50.6	9.8	19.2	28.2	46.1	8.2	18.6	29.3	44.5	7.6	17.2	31.4	41.4	6.6
10.8	44	23.7	23.1	56.8	12.3	21.8	25.6	52.4	10.5	19.9	28.5	47.8	8.8	19.2	29.5	46.2	8.2	17.9	31.6	42.9	7.1
	45	24.0	23.2	57.7	12.7	22.2	25.7	53.3	10.8	20.3	28.6	48.6	9.1	19.6	29.6	47.0	8.5	18.2	31.7	43.7	7.3
	48	25.3	23.6	60.8	14.0	23.4	26.2	56.1	12.0	21.3	28.9	51.2	10.0	20.6	29.9	49.5	9.4	19.2	31.9	46.0	8.1
5030	42	29.1	29.2	69.8	12.1	26.9	32.7	64.5	10.4	24.6	36.7	59.0	8.7	23.8	38.3	57.1	8.2	22.2	41.4	53.3	7.2
10.7	44	30.2	29.5	72.5	13.0	27.9	33.0	66.9	11.2	25.5	37.0	61.3	9.4	24.7	38.6	59.3	8.8	23.1	41.7	55.4	7.7
	45	30.7	29.7	73.7	13.5	28.4	33.1	68.1	11.5	26.0	37.2	62.4	9.7	25.1	38.7	60.3	9.1	23.5	41.9	56.4	8.0
	48	32.4	30.1	77.7	14.9	29.9	33.6	71.8	12.8	27.4	37.7	65.7	10.7	26.5	39.2	63.5	10.1	24.7	42.3	59.3	8.8
5040	42	38.5	38.6	92.4	9.5	35.3	43.3	84.7	8.0	31.9	48.7	76.6	6.6	30.7	50.7	73.6	6.1	28.2	54.7	67.7	5.2
10.6	44	39.9	39.0	95.7	10.2	36.6	43.7	87.8	8.6	33.1	49.1	79.4	7.1	31.8	51.0	76.3	6.6	29.3	55.0	70.3	5.6
	45	40.6	39.2	97.4	10.5	37.3	44.0	89.4	8.9	33.7	49.3	80.9	7.3	32.4	51.2	77.8	6.8	29.8	55.2	71.6	5.8
	48	42.7	39.9	102.6	11.7	39.3	44.6	94.2	9.9	35.5	49.9	85.3	8.1	34.2	51.8	82.0	7.6	31.5	55.7	75.6	6.5
5045	42	44.6	47.3	107.0	9.6	41.1	52.5	98.6	8.2	37.4	58.3	89.7	6.8	36.1	60.4	86.6	6.4	33.5	64.7	80.3	5.5
10.3	44	46.2	47.8	110.9	10.2	42.6	53.0	102.2	8.8	38.8	58.8	93.1	7.3	37.4	60.9	89.8	6.9	34.7	65.2	83.4	6.0
	45	47.0	48.1	112.9	10.6	43.4	53.3	104.1	9.1	39.5	59.1	94.8	7.6	38.1	61.2	91.5	7.1	35.4	65.4	85.0	6.2
	48	49.5	49.1	118.8	11.7	45.7	54.2	109.6	10.0	41.6	59.8	99.9	8.4	40.2	61.8	96.4	7.8	37.3	65.8	89.6	6.8
5050	42	46.3	49.5	111.0	10.2	42.6	55.2	102.4	8.8	38.9	61.8	93.3	7.4	37.6	64.2	90.2	7.0	34.9	69.1	83.9	6.2
10.2	44	47.8	50.0	114.7	10.9	44.1	55.8	105.8	9.3	40.2	62.3	96.5	7.9	38.8	64.7	93.2	7.4	36.1	69.6	86.7	6.5
	45	48.6	50.3	116.6	11.3	44.8	56.0	107.6	9.6	40.9	62.6	98.1	8.1	39.5	65.0	94.8	7.6	36.7	69.9	88.2	6.7
	48	52.0	51.4	124.9	12.9	48.0	57.2	115.2	11.0	43.8	63.7	105.1	9.2	42.3	66.1	101.5	8.6	39.4	71.0	94.5	7.6
5055	42	52.2	55.8	125.3	13.0	48.2	61.9	115.7	11.1	44.0	69.0	105.6	9.3	42.5	71.5	102.1	8.7	39.6	76.8	95.0	7.7
10.4	44	54.0	56.3	129.5	13.8	49.8	62.5	119.6	11.8	45.5	69.6	109.2	9.9	44.0	72.1	105.5	9.3	40.9	77.4	98.2	8.1
	45	54.8	56.7	131.6	14.3	50.6	62.8	121.5	12.2	46.2	69.9	111.0	10.2	44.7	72.4	107.2	9.6	41.6	77.7	99.8	8.4
	48	58.5	58.0	140.5	16.2	54.0	64.2	129.6	13.8	49.3	71.1	118.4	11.6	47.7	73.7	114.4	10.8	44.4	78.9	106.5	9.5
5060	42	58.6	63.0	140.6	9.0	54.1	69.7	129.9	7.8	49.4	77.2	118.6	6.6	47.8	79.9	114.7	6.2	44.5	85.5	106.7	5.6
10.4	44	60.4	63.6	144.9	9.6	55.8	70.3	133.9	8.2	51.0	77.9	122.3	7.0	49.3	80.7	118.2	6.6	45.9	86.3	110.1	5.9
	45	61.3	64.0	147.2	9.9	56.7	70.7	136.0	8.5	51.8	78.3	124.2	7.2	50.0	81.0	120.1	6.7	46.6	86.7	111.8	6.0
	48	64.5	65.2	154.9	11.0	59.6	71.9	143.1	9.4	54.5	79.5	130.7	7.9	52.6	82.2	126.3	7.4	49.0	87.8	117.7	6.5
5070	42	68.9	74.1	165.2	12.5	63.4	82.7	152.3	10.7	57.8	92.5	138.8	9.0	55.8	96.1	134.0	8.6	51.9	103.5	124.6	7.7
10.2	44	71.1	74.8	170.6	13.4	65.5	83.4	157.1	11.3	59.7	93.2	143.2	9.5	57.6	96.8	138.3	9.0	53.5	104.2	128.5	8.1
	45	72.3	75.2	173.5	13.8	66.6	83.8	159.8	11.7	60.7	93.6	145.6	9.8	58.6	97.2	140.6	9.2	54.5	104.5	130.7	8.2
	48	77.3	76.9	185.4	15.9	71.1	85.5	170.7	13.4	64.8	95.2	155.5	11.1	62.5	98.8	150.1	10.4	57.3	105.7	137.5	8.9
5075	42	74.8	79.9	179.4	14.8	69.0	88.9	165.5	12.6	62.9	99.2	151.0	10.5	60.8	102.9	145.9	9.8	56.5	110.6	135.6	8.7
10.3	44	77.1	80.7	185.0	15.8	71.1	89.7	170.6	13.4	64.9	99.9	155.7	11.1	62.6	103.7	150.3	10.4	58.2	111.4	139.8	9.1
	45	78.4	81.1	188.1	16.3	72.3	90.1	173.4	13.8	65.9	100.4	158.2	11.5	63.7	104.1	152.8	10.7	59.2	111.8	142.0	9.4
	48	83.4	82.8	200.1	18.5	76.8	91.8	184.4	15.7	70.0	102.0	168.1	13.0	67.6	105.7	162.3	12.1	62.8	113.3	150.8	10.5
5085	42	82.7	87.6	198.4	6.2	76.4	97.2	183.3	5.2	69.8	108.0	167.4	4.3	67.4	111.9	161.8	4.0	62.8	120.0	150.7	3.3
10.5	44	84.9	88.4	203.8	6.5	78.4	98.0	188.2	5.5	71.7	108.8	172.0	4.6	69.3	112.7	166.2	4.2	64.5	120.8	154.8	3.6
	45	86.3	88.9	207.0	6.7	79.7	98.5	191.2	5.7	72.8	109.3	174.7	4.7	70.3	113.2	168.8	4.4	65.5	121.3	157.2	3.7
	48	91.1	90.7	218.6	7.5	84.1	100.2	201.9	6.4	76.8	111.0	184.4	5.3	74.3	114.9	178.2	4.9	69.2	122.9	166.0	4.2

Table 5

Notes:

Capacity ratings are based on 10ºF range and 0.0001ft².hºF/Btu fouling factor.

* Power input mentioned in this page should not be used for cable or fuse selection. MCA and MFA values given in the electrical data pages (24 to 28) should be referred for the same.

CAPACITY RATINGS - 50 Hz (IP)

Model ACMR EER	LCWT	Condenser Entering Air Temperature °F																			
		95				105				115				118.4				125			
		CCap	PI*	WFR	WPD	CCap	PI*	WFR	WPD	CCap	PI*	WFR	WPD	CCap	PI*	WFR	WPD	CCap	PI*	WFR	WPD
	°F	TR	kW	USgpm	ft.wg	TR	kW	USgpm	ft.wg	TR	kW	USgpm	ft.wg	TR	kW	USgpm	ft.wg	TR	kW	USgpm	ft.wg
5090	42	88.3	94.6	212.0	7.1	81.6	104.7	195.8	6.0	74.5	116.0	178.9	5.0	72.1	120.1	172.9	4.6	67.1	128.5	161.0	3.9
10.4	44	90.7	95.5	217.6	7.4	83.8	105.5	201.0	6.4	76.5	116.9	183.7	5.3	74.0	121.0	177.5	4.9	68.9	129.5	165.3	4.2
	45	92.0	96.0	220.9	7.7	85.0	106.1	204.1	6.6	77.7	117.4	186.5	5.4	75.1	121.6	180.2	5.1	69.9	130.0	167.8	4.3
	48	97.0	97.9	232.9	8.5	89.6	108.0	215.1	7.3	81.9	119.3	196.5	6.1	79.1	123.4	189.9	5.6	73.7	131.8	176.8	4.8
5095	42	93.1	99.2	223.4	7.8	85.8	110.7	206.0	6.7	78.3	123.8	187.9	5.7	75.6	128.6	181.5	5.3	70.4	138.5	168.9	4.8
10.2	44	95.4	100.0	229.0	8.2	88.0	111.5	211.2	7.0	80.3	124.6	192.7	5.9	77.6	129.4	186.2	5.6	72.2	139.2	173.3	5.0
	45	96.4	100.3	231.3	8.4	88.9	111.8	213.4	7.2	81.1	124.9	194.7	6.1	78.4	129.7	188.2	5.7	73.0	139.5	175.2	5.0
	48	98.7	101.1	237.0	8.8	91.1	112.6	218.7	7.5	83.2	125.7	199.7	6.3	80.4	130.5	193.0	6.0	74.9	140.3	179.8	5.3
5110	42	105.1	111.7	252.3	9.9	97.0	124.1	232.9	8.5	88.6	138.1	212.7	7.1	85.6	143.3	205.5	6.7	79.7	153.8	191.2	5.9
10.4	44	107.9	112.7	259.0	10.5	99.7	125.1	239.2	8.9	91.1	139.2	218.5	7.5	88.0	144.3	211.2	7.0	82.0	154.8	196.7	6.2
	45	109.1	113.1	261.9	10.7	100.8	125.5	241.9	9.1	92.1	139.6	221.0	7.7	89.0	144.7	213.6	7.2	82.9	155.2	199.0	6.3
	48	111.9	114.1	268.7	11.3	103.4	126.5	248.3	9.6	94.5	140.6	226.9	8.1	91.4	145.8	219.5	7.6	85.2	156.3	204.6	6.6
5120	42	116.8	125.8	280.2	13.6	107.8	139.1	258.7	11.5	98.4	154.2	236.1	9.3	95.0	159.6	228.1	8.6	88.4	170.8	212.1	7.2
10.4	44	120.7	127.2	289.8	14.5	111.5	140.6	267.6	12.3	101.8	155.7	244.3	10.1	98.4	161.2	236.0	9.3	91.5	172.4	219.6	7.8
	45	122.6	128.0	294.3	15.0	113.2	141.4	271.8	12.7	103.4	156.5	248.2	10.5	99.9	162.0	239.9	9.7	93.0	173.2	223.2	8.2
	48	127.9	130.0	307.0	16.3	118.2	143.4	283.6	13.9	108.0	158.5	259.1	11.5	104.3	164.0	250.4	10.7	97.2	175.3	233.2	9.1
5130	42	128.8	134.7	309.2	7.5	118.8	150.1	285.1	6.4	108.3	167.9	260.0	5.3	104.6	174.4	251.1	4.9	97.3	187.7	233.4	4.3
10.4	44	132.8	135.8	318.8	7.9	122.5	151.3	294.0	6.8	111.8	169.1	268.2	5.6	107.9	175.6	259.1	5.3	100.4	188.9	240.9	4.5
	45	135.0	136.4	323.9	8.2	124.5	152.0	298.7	7.0	113.6	169.7	272.5	5.8	109.7	176.2	263.2	5.4	102.0	189.5	244.8	4.7
	48	142.2	138.6	341.3	9.1	131.1	154.1	314.7	7.7	119.7	171.9	287.2	6.5	115.6	178.4	277.4	6.0	107.5	191.7	258.0	5.2
5140	42	136.3	147.7	327.1	8.3	125.5	164.9	301.1	7.1	114.3	184.5	274.2	5.9	110.3	191.7	264.7	5.5	102.4	206.5	245.7	4.7
10.1	44	140.5	149.1	337.3	8.8	129.4	166.3	310.6	7.5	117.9	185.8	282.9	6.3	113.8	193.0	273.0	5.8	105.6	207.8	253.5	5.0
	45	142.8	149.8	342.6	9.1	131.5	167.0	315.5	7.8	119.7	186.6	287.4	6.5	115.6	193.7	277.4	6.0	107.3	208.4	257.6	5.2
	48	150.2	152.3	360.5	10.1	138.3	169.5	332.0	8.6	126.0	189.0	302.4	7.2	121.6	196.1	291.9	6.7	113.0	210.7	271.2	5.8
5155	42	150.3	160.1	360.7	5.0	138.7	178.1	332.8	4.3	126.5	198.6	303.7	3.7	122.2	206.1	293.4	3.4	113.7	221.5	272.9	3.0
10.4	44	155.4	161.8	373.0	5.4	143.4	179.9	344.2	4.6	130.9	200.4	314.1	3.9	126.5	207.9	303.5	3.6	117.7	223.2	282.4	3.2
	45	158.1	162.7	379.4	5.6	145.9	180.8	350.1	4.8	133.1	201.2	319.5	4.0	128.6	208.7	308.7	3.8	119.7	224.1	287.2	3.3
	48	165.8	165.3	397.9	6.1	153.0	183.4	367.3	5.2	139.8	203.9	335.4	4.4	135.1	211.4	324.2	4.1	125.8	226.7	301.9	3.6
5165	42	161.0	173.8	386.5	5.8	148.6	192.8	356.7	4.9	135.6	214.3	325.5	4.2	131.0	222.1	314.4	3.9	121.8	238.1	292.4	3.4
10.3	44	166.5	175.7	399.5	6.2	153.6	194.7	368.7	5.3	140.2	216.3	336.5	4.4	135.5	224.1	325.1	4.1	126.0	240.2	302.4	3.6
	45	169.3	176.6	406.2	6.4	156.2	195.7	374.9	5.4	142.6	217.3	342.2	4.6	137.7	225.1	330.6	4.3	128.1	241.2	307.5	3.7
	48	177.6	179.7	426.3	7.0	164.0	198.8	393.5	6.0	149.8	220.3	359.4	5.0	144.7	228.2	347.3	4.7	134.7	244.3	323.3	4.1
5180	42	175.1	188.7	420.4	9.1	161.7	208.7	388.0	7.8	147.5	231.2	354.1	6.5	142.5	239.4	342.0	6.1	132.5	256.1	318.0	5.3
10.4	44	180.6	190.7	433.3	9.7	166.7	210.7	400.0	8.3	152.2	233.4	365.2	6.9	147.0	241.6	352.8	6.5	136.7	258.4	328.1	5.6
	45	183.4	191.7	440.2	10.0	169.3	211.8	406.4	8.5	154.5	234.4	370.9	7.1	149.4	242.7	358.4	6.7	138.9	259.5	333.5	5.8
	48	192.7	195.3	462.5	11.0	177.9	215.4	427.0	9.4	162.5	238.0	389.9	7.9	157.0	246.3	376.7	7.4	146.1	263.0	350.6	6.4
5190	42	186.2	198.4	446.9	7.8	171.7	221.4	412.1	6.7	156.6	247.6	375.8	5.7	151.3	257.2	363.0	5.3	140.7	277.0	337.7	4.8
10.2	44	190.8	199.9	457.9	8.2	176.0	222.9	422.4	7.0	160.6	249.1	385.4	5.9	155.2	258.7	372.4	5.6	144.4	278.4	346.6	5.0
	45	192.8	200.6	462.7	8.4	177.8	223.6	426.8	7.2	162.3	249.8	389.5	6.1	156.8	259.4	376.4	5.7	146.0	279.1	350.4	5.0
	48	197.5	202.1	473.9	8.8	182.2	225.2	437.3	7.5	166.4	251.4	399.3	6.3	160.8	261.0	386.0	6.0	149.8	280.6	359.6	5.3
5205	42	199.1	209.7	477.8	8.9	183.7	233.4	441.0	7.6	167.8	260.4	402.6	6.4	162.1	270.3	389.0	6.0	150.9	290.6	362.1	5.3
10.4	44	204.2	211.4	490.1	9.4	188.6	235.1	452.6	8.0	172.2	262.2	413.4	6.7	166.5	272.1	399.5	6.3	155.1	292.4	372.1	5.6
	45	206.4	212.1	495.3	9.6	190.6	235.9	457.4	8.2	174.1	262.9	417.9	6.9	168.3	272.8	404.0	6.5	156.8	293.1	376.3	5.7
	48	211.6	213.8	507.9	10.1	195.5	237.7	469.2	8.6	178.7	264.7	428.9	7.2	172.8	274.6	414.7	6.8	161.1	294.9	386.6	6.0
5215	42	210.3	223.5	504.6	9.9	194.1	248.2	465.9	8.5	177.2	276.3	425.3	7.1	171.2	286.5	410.9	6.7	159.3	307.5	382.4	5.9
10.4	44	215.9	225.4	518.0	10.5	199.4	250.2	478.5	8.9	182.1	278.3	437.1	7.5	176.0	288.6	422.4	7.0	163.9	309.6	393.4	6.2
	45	218.2	226.2	523.7	10.7	201.6	251.0	483.8	9.1	184.2	279.2	442.0	7.7	178.0	289.4	427.3	7.2	165.8	310.5	398.0	6.3
	48	223.9	228.2	537.3	11.3	206.9	253.1	496.5	9.6	189.1	281.2	453.8	8.1	182.9	291.5	438.9	7.6	170.5	312.6	409.2	6.6
5230	42	222.7	237.8	534.6	12.3	205.6	263.5	493.5	10.3	187.7	292.6	450.4	8.3	181.3	303.2	435.1	7.7	168.7	324.8	404.8	6.3
10.4	44	230.3	240.5	552.6	13.2	212.6	266.3	510.3	11.1	194.2	295.4	466.0	9.0	187.6	306.0	450.2	8.3	174.6	327.8	419.0	7.0
	45	233.9	241.8	561.3	13.6	216.0	267.6	518.3	11.5	197.2	296.8	473.4	9.4	190.6	307.4	457.4	8.7	177.4	329.1	425.9	7.3
	48	243.9	245.5	585.3	14.8	225.3	271.4	540.6	12.6	205.8	300.5	494.0	10.3	199.0	311.1	477.5	9.6	185.3	332.8	444.8	8.1
5240	42	233.5	251.5	560.5	13.6	215.6	278.3	517.4	11.5	196.8	308.3	472.2	9.3	190.1	319.3	456.2	8.6	176.8	341.5	424.2	7.2
10.4	44	241.5	254.5	579.5	14.5	223.0	281.3	535.1	12.3	203.6	311.5	488.6	10.1	196.7	322.5	472.1	9.3	183.0	344.9	439.3	7.8
	45	245.3	255.9	588.6	15.0	226.5	282.7	543.6	12.7	206.9	313.0	496.5	10.5	199.9	324.0	479.7	9.7	186.0	346.4	446.5	8.2
	48	255.8	260.0	614.0	16.3	236.3	286.9	567.1	13.9	215.9	317.1	518.2	11.5	208.7	328.1	500.9	10.7	194.4	350.5	466.5	9.1

Table 6

Notes :

Capacity ratings are based on 10ºF range and 0.0001ft².hºF/Btu fouling factor.

* Power input mentioned in this page should not be used for cable or fuse selection. MCA and MFA values given in the electrical data pages (24 to 28) should be referred for the same.

CAPACITY RATINGS - 60 Hz (IP)

Model ACMR EER	LCWT	Condenser Entering Air Temperature °F																			
		95				105				115				118.4				125			
		CCap	PI*	WFR	WPD	CCap	PI*	WFR	WPD	CCap	PI*	WFR	WPD	CCap	PI*	WFR	WPD	CCap	PI*	WFR	WPD
	°F	TR	kW	USgpm	ft.wg	TR	kW	USgpm	ft.wg	TR	kW	USgpm	ft.wg	TR	kW	USgpm	ft.wg	TR	kW	USgpm	ft.wg
6010	42	9.3	9.5	22.3	6.7	8.5	10.8	20.4	5.8	7.7	12.2	18.4	4.9	7.4	12.7	17.7	4.6	6.8	13.7	16.2	4.1
10.8	44	9.6	9.6	22.9	7.0	8.8	10.8	21.0	6.1	7.9	12.2	19.0	5.2	7.6	12.7	18.2	4.9	7.0	13.8	16.8	4.3
	45	9.7	9.6	23.2	7.2	8.9	10.9	21.3	6.2	8.0	12.3	19.2	5.3	7.7	12.8	18.5	5.0	7.1	13.8	17.0	4.4
	48	10.0	9.7	24.0	7.6	9.2	10.9	22.0	6.6	8.3	12.3	19.9	5.6	8.0	12.9	19.2	5.2	7.3	13.9	17.6	4.6
6014	42	13.7	14.1	32.8	8.3	12.6	15.6	30.2	7.2	11.5	17.3	27.6	6.1	11.1	17.9	26.6	5.8	10.3	19.2	24.7	5.1
10.3	44	14.1	14.2	33.9	8.8	13.0	15.8	31.3	7.7	11.9	17.5	28.5	6.5	11.5	18.1	27.6	6.1	10.7	19.3	25.6	5.4
	45	14.3	14.3	34.4	9.1	13.2	15.8	31.8	7.9	12.1	17.5	29.0	6.7	11.7	18.1	28.0	6.3	10.8	19.4	26.0	5.6
	48	14.9	14.5	35.8	9.8	13.8	16.0	33.1	8.4	12.6	17.7	30.2	7.2	12.1	18.3	29.1	6.8	11.3	19.5	27.1	6.0
6018	42	17.3	18.0	41.6	10.2	16.0	19.9	38.4	8.7	14.7	22.2	35.2	7.4	14.2	23.0	34.0	6.9	13.2	24.8	31.8	6.1
10.6	44	18.0	18.2	43.3	11.0	16.7	20.1	40.0	9.4	15.2	22.4	36.6	7.9	14.8	23.2	35.4	7.5	13.8	25.0	33.1	6.6
	45	18.4	18.3	44.1	11.4	17.0	20.3	40.7	9.8	15.5	22.5	37.3	8.2	15.0	23.4	36.1	7.7	14.0	25.1	33.7	6.8
	48	19.7	18.7	47.3	13.1	18.2	20.7	43.6	11.2	16.6	22.9	39.9	9.4	15.7	23.6	37.7	8.4	14.6	25.3	35.1	7.4
6022	42	22.1	22.7	53.0	10.7	20.4	25.1	49.0	9.2	18.7	27.8	44.9	7.7	18.1	28.7	43.4	7.2	16.9	30.7	40.5	6.3
10.1	44	22.9	22.9	54.9	11.5	21.2	25.3	50.8	9.9	19.4	28.0	46.6	8.3	18.8	29.0	45.1	7.8	17.5	30.9	42.1	6.8
	45	23.2	23.0	55.8	11.9	21.5	25.4	51.7	10.2	19.7	28.1	47.3	8.6	19.1	29.1	45.8	8.0	17.8	31.0	42.8	7.0
	48	24.5	23.4	58.9	13.2	22.7	25.8	54.5	11.3	20.8	28.5	49.9	9.5	20.1	29.5	48.3	8.9	18.8	31.4	45.0	7.8
6028	42	27.5	27.6	66.1	10.9	25.4	30.7	61.0	9.3	23.2	34.0	55.6	7.8	22.4	35.3	53.7	7.3	20.8	37.7	49.9	6.3
9.9	44	28.5	27.9	68.4	11.6	26.3	31.0	63.2	10.0	24.0	34.3	57.7	8.3	23.2	35.5	55.7	7.8	21.6	38.0	51.8	6.8
	45	29.0	28.1	69.5	12.0	26.8	31.1	64.2	10.3	24.4	34.5	58.7	8.6	23.6	35.7	56.7	8.1	22.0	38.1	52.7	7.0
	48	30.5	28.5	73.2	13.3	28.2	31.6	67.6	11.4	25.7	34.9	61.7	9.5	24.9	36.1	59.6	8.9	23.1	38.5	55.5	7.7
6035	42	35.1	35.7	84.2	8.8	32.5	39.6	77.9	7.6	29.7	44.1	71.4	6.5	28.8	45.8	69.1	6.1	26.9	49.2	64.6	5.4
10.2	44	36.4	36.1	87.4	9.4	33.7	40.0	80.8	8.1	30.9	44.5	74.1	6.9	29.9	46.2	71.7	6.5	28.0	49.6	67.1	5.8
	45	37.0	36.3	88.9	9.7	34.3	40.2	82.3	8.4	31.4	44.7	75.4	7.2	30.4	46.4	73.0	6.8	28.5	49.8	68.3	6.0
	48	38.9	36.9	93.4	10.6	36.0	40.8	86.4	9.2	33.0	45.3	79.3	7.9	32.0	47.0	76.8	7.4	29.9	50.4	71.8	6.6
6045	42	45.4	47.4	108.8	9.9	41.5	53.2	99.7	8.3	37.4	59.7	89.9	6.9	36.0	62.1	86.4	6.4	33.1	66.9	79.3	5.4
9.9	44	47.0	47.9	112.8	10.6	43.1	53.7	103.4	8.9	38.8	60.2	93.2	7.4	37.3	62.6	89.6	6.8	34.3	67.4	82.4	5.8
	45	47.9	48.1	114.9	11.0	43.9	53.9	105.3	9.3	39.6	60.4	95.0	7.6	38.0	62.8	91.3	7.1	35.0	67.7	83.9	6.0
	48	50.4	48.8	121.0	12.1	46.2	54.6	110.9	10.2	41.7	61.2	100.1	8.4	39.9	63.5	95.9	7.8	36.9	68.4	88.5	6.7
6055	42	53.3	57.2	127.9	10.0	49.1	63.4	117.9	8.5	44.7	70.2	107.3	7.1	43.1	72.7	103.5	6.6	40.0	77.8	96.0	5.7
9.9	44	55.2	57.8	132.6	10.7	50.9	64.0	122.2	9.1	46.4	70.9	111.3	7.6	44.8	73.3	107.4	7.1	41.6	78.3	99.8	6.2
	45	56.2	58.2	135.0	11.0	51.8	64.4	124.4	9.4	47.2	71.2	113.4	7.9	45.6	73.7	109.4	7.3	42.3	78.6	101.6	6.4
	48	59.2	59.2	142.0	12.2	54.6	65.4	131.0	10.4	49.7	72.2	119.4	8.7	48.0	74.6	115.3	8.1	44.6	79.5	107.1	7.1
6060	42	57.1	59.9	136.9	8.6	52.8	66.4	126.7	7.4	48.3	73.5	116.0	6.4	46.7	76.1	112.2	6.0	43.4	81.3	104.1	5.4
10.3	44	58.9	60.5	141.3	9.1	54.5	66.9	130.8	7.9	49.9	74.1	119.7	6.7	48.2	76.7	115.7	6.3	44.9	82.0	107.9	5.7
	45	59.8	60.8	143.5	9.4	55.4	67.3	132.9	8.1	50.7	74.4	121.6	6.9	49.0	77.0	117.6	6.5	45.7	82.3	109.6	5.8
	48	63.0	61.8	151.1	10.4	58.3	68.3	139.9	8.9	53.3	75.5	128.0	7.6	51.6	78.1	123.8	7.1	48.1	83.4	115.4	6.3
6065	42	63.2	68.5	151.6	10.5	58.4	75.5	140.2	9.0	53.5	83.4	128.4	7.6	51.8	86.2	124.3	7.2	48.4	92.0	116.1	6.4
10.1	44	65.2	69.1	156.4	11.2	60.3	76.2	144.6	9.6	55.2	84.0	132.5	8.1	53.4	86.9	128.2	7.6	49.9	92.7	119.8	6.7
	45	66.2	69.5	158.9	11.6	61.2	76.5	146.9	9.9	56.1	84.3	134.6	8.3	54.3	87.2	130.3	7.8	50.7	93.0	121.7	6.9
	48	69.7	70.6	167.3	12.9	64.5	77.6	154.7	11.0	59.0	85.5	141.7	9.2	57.1	88.3	137.1	8.6	53.4	94.2	128.1	7.6
6075	42	71.0	78.6	170.3	14.0	65.6	86.3	157.4	11.7	60.1	94.9	144.2	9.1	58.2	98.1	139.6	8.2	54.4	104.5	130.7	6.1
10.1	44	73.3	79.4	175.9	15.0	67.7	87.1	162.5	12.6	62.1	95.7	149.0	10.1	60.1	98.8	144.3	9.1	56.3	105.3	135.0	7.1
	45	74.4	79.7	178.5	15.4	68.7	87.4	165.0	13.1	63.0	96.1	151.2	10.5	61.0	99.2	146.4	9.6	57.1	105.6	137.1	7.6
	48	77.8	80.8	186.6	16.8	71.9	88.5	172.5	14.4	65.9	97.2	158.2	11.8	63.8	100.3	153.2	10.9	59.7	106.7	143.4	8.9
6085	42	86.0	90.0	206.4	6.7	79.6	99.7	191.1	5.7	72.9	110.4	174.9	4.7	70.5	114.3	169.1	4.4	65.7	122.2	157.7	3.7
10.3	44	88.4	90.8	212.1	7.1	81.8	100.4	196.3	6.1	74.9	111.2	179.7	5.0	72.4	115.1	173.8	4.7	67.5	123.0	162.0	4.0
	45	89.8	91.2	215.4	7.3	83.1	100.9	199.4	6.2	76.0	111.7	182.5	5.2	73.5	115.6	176.5	4.8	68.6	123.5	164.5	4.1
	48	94.7	92.8	227.3	8.1	87.6	102.5	210.3	7.0	80.2	113.3	192.5	5.8	77.6	117.3	186.1	5.4	72.3	125.2	173.5	4.7
6095	42	92.4	98.3	221.9	7.7	85.5	108.5	205.3	6.6	78.4	119.9	188.1	5.5	75.8	124.0	182.0	5.2	70.8	132.5	170.0	4.4
10.3	44	95.0	99.1	227.9	8.2	87.9	109.3	210.9	7.0	80.5	120.7	193.2	5.9	77.9	124.8	186.9	5.5	72.7	133.3	174.6	4.7
	45	96.4	99.5	231.4	8.4	89.2	109.7	214.1	7.2	81.7	121.2	196.1	6.0	79.1	125.3	189.8	5.6	73.8	133.7	177.2	4.9
	48	101.7	101.2	244.1	9.3	94.0	111.4	225.7	8.0	86.1	122.8	206.7	6.7	83.3	127.0	200.0	6.3	77.8	135.4	186.6	5.4
6105	42	99.3	108.0	238.3	4.3	91.8	118.8	220.3	3.7	84.1	131.0	201.8	3.1	81.4	135.4	195.3	2.9	76.0	144.4	182.5	2.6
10.2	44	102.5	109.0	246.1	4.5	94.8	119.9	227.5	3.9	86.8	132.1	208.4	3.3	84.1	136.5	201.7	3.1	78.6	145.5	188.6	2.8
	45	104.2	109.6	250.2	4.7	96.4	120.4	231.3	4.0	88.3	132.6	211.9	3.4	85.5	137.0	205.1	3.2	79.9	146.0	191.7	2.8
	48	109.5	111.2	262.8	5.1	101.3	122.1	243.0	4.4	92.8	134.3	222.7	3.7	89.8	138.8	215.6	3.5	84.0	147.8	201.5	3.1

Table 7

Notes:

Capacity ratings are based on 10ºF range and 0.0001ft².hºF/Btu fouling factor.

* Power input mentioned in this page should not be used for cable or fuse selection. MCA and MFA values given in the electrical data pages (24 to 28) should be referred for the same.

CAPACITY RATINGS - 60 Hz (IP)

Model ACMR EER	LCWT	Condenser Entering Air Temperature °F																			
		95				105				115				118.4				125			
		CCap	PI*	WFR	WPD	CCap	PI*	WFR	WPD	CCap	PI*	WFR	WPD	CCap	PI*	WFR	WPD	CCap	PI*	WFR	WPD
	°F	TR	kW	USgpm	ft.wg	TR	kW	USgpm	ft.wg	TR	kW	USgpm	ft.wg	TR	kW	USgpm	ft.wg	TR	kW	USgpm	ft.wg
6110	42	104.8	117.4	251.4	4.7	96.8	128.9	232.3	4.1	88.7	141.8	212.8	3.4	85.9	146.5	206.0	3.2	80.3	156.1	192.8	2.9
9.9	44	108.2	118.5	259.7	5.0	100.0	130.0	239.9	4.3	91.6	143.0	219.9	3.7	88.7	147.7	212.9	3.4	83.0	157.3	199.2	3.0
	45	110.0	119.1	264.0	5.2	101.6	130.6	243.9	4.5	93.1	143.6	223.5	3.8	90.2	148.3	216.4	3.5	84.4	157.9	202.5	3.1
	48	115.6	120.9	277.5	5.7	106.8	132.5	256.4	4.9	97.9	145.4	235.0	4.1	94.8	150.1	227.5	3.9	88.7	159.7	212.9	3.4
6120	42	113.8	119.8	273.2	12.9	105.3	132.6	252.6	10.9	96.2	146.9	231.0	8.9	93.0	152.1	223.2	8.2	86.6	162.5	207.9	6.8
10.3	44	117.7	121.0	282.6	13.8	108.9	133.9	261.5	11.7	99.7	148.2	239.2	9.6	96.3	153.4	231.2	8.9	89.7	163.9	215.4	7.5
	45	119.6	121.6	287.1	14.3	110.7	134.5	265.6	12.1	101.3	148.8	243.0	10.0	97.9	154.0	235.0	9.2	91.2	164.6	219.0	7.8
	48	124.8	123.3	299.5	15.6	115.5	136.2	277.2	13.3	105.7	150.6	253.7	11.0	102.2	155.9	245.4	10.2	95.3	166.5	228.8	8.7
6130	42	125.5	136.7	301.2	15.7	116.0	150.7	278.3	13.4	106.1	166.4	254.7	11.1	102.6	172.1	246.3	10.3	95.8	183.7	229.8	8.8
10.1	44	130.0	138.2	312.0	16.9	120.1	152.2	288.4	14.4	110.0	167.9	263.9	12.0	106.4	173.6	255.3	11.1	99.3	185.1	238.3	9.5
	45	132.2	138.9	317.2	17.4	122.2	152.9	293.2	14.9	111.8	168.6	268.4	12.4	108.2	174.3	259.7	11.5	101.0	185.9	242.4	9.9
	48	138.2	140.8	331.6	19.0	127.7	154.8	306.6	16.3	117.0	170.6	280.8	13.6	113.2	176.3	271.7	12.7	105.7	187.9	253.8	11.0
6140	42	135.9	155.2	326.1	18.4	125.4	170.5	300.9	15.7	114.8	187.7	275.5	13.1	111.1	193.9	266.5	12.2	103.8	206.7	249.0	10.5
9.8	44	140.8	156.9	337.9	19.8	130.0	172.2	311.9	16.9	119.0	189.4	285.6	14.1	115.1	195.6	276.3	13.2	107.6	208.4	258.2	11.4
	45	143.2	157.7	343.7	20.4	132.2	173.0	317.3	17.5	121.1	190.2	290.5	14.6	117.2	196.5	281.2	13.7	109.5	209.2	262.8	11.8
	48	149.9	159.9	359.8	22.3	138.5	175.2	332.3	19.1	126.8	192.4	304.4	16.1	122.8	198.7	294.6	15.0	114.8	211.5	275.5	13.1
6160	42	153.4	161.2	368.3	10.5	141.7	178.6	340.2	9.0	129.4	198.0	310.7	7.5	125.0	205.0	300.1	7.0	116.2	219.3	278.9	6.1
10.2	44	158.4	162.7	380.3	11.2	146.4	180.1	351.4	9.6	133.8	199.5	321.1	8.0	129.3	206.5	310.2	7.5	120.2	220.7	288.6	6.5
	45	161.0	163.4	386.4	11.5	148.8	180.9	357.2	9.9	136.0	200.3	326.5	8.3	131.4	207.3	315.4	7.8	122.3	221.5	293.4	6.7
	48	169.2	165.8	406.1	12.7	156.4	183.3	375.3	10.9	142.9	202.7	343.0	9.1	138.1	209.7	331.4	8.6	128.5	223.9	308.4	7.4
6175	42	167.2	178.5	401.2	6.2	154.6	197.7	370.9	5.3	141.3	219.1	339.0	4.5	136.5	226.9	327.6	4.2	127.0	242.6	304.9	3.7
10.2	44	172.9	180.3	415.0	6.6	159.9	199.6	383.7	5.7	146.2	221.0	350.8	4.8	141.3	228.8	339.0	4.5	131.5	244.5	315.6	3.9
	45	175.8	181.3	422.0	6.8	162.6	200.6	390.3	5.9	148.7	222.0	356.8	4.9	143.7	229.8	344.8	4.6	133.8	245.5	321.1	4.0
	48	184.7	184.1	443.2	7.5	170.8	203.5	410.0	6.5	156.3	225.0	375.1	5.4	151.1	232.8	362.6	5.1	140.8	248.6	337.8	4.5
6190	42	182.9	195.9	438.9	9.9	169.0	216.2	405.6	8.5	154.6	239.0	371.1	7.1	149.5	247.2	358.9	6.7	139.4	264.0	334.6	5.8
10.2	44	188.7	197.7	452.9	10.5	174.4	218.1	418.7	9.0	159.6	240.9	383.1	7.6	154.4	249.1	370.5	7.1	144.0	265.9	345.5	6.2
	45	191.8	198.7	460.3	10.9	177.3	219.1	425.5	9.3	162.3	241.9	389.4	7.8	156.9	250.1	376.6	7.4	146.4	266.9	351.2	6.4
	48	201.7	201.8	484.2	12.0	186.5	222.2	447.6	10.3	170.7	245.1	409.7	8.7	165.1	253.3	396.2	8.1	154.0	270.2	369.6	7.1
6200	42	193.4	214.3	464.2	11.0	178.6	235.9	428.7	9.5	163.4	260.1	392.2	8.0	158.1	268.9	379.4	7.5	147.5	286.9	354.1	6.5
10	44	199.6	216.3	479.1	11.7	184.3	237.9	442.4	10.1	168.7	262.2	404.8	8.5	163.2	271.0	391.6	7.9	152.3	288.9	365.5	6.9
	45	202.9	217.3	486.9	12.1	187.4	239.0	449.7	10.4	171.5	263.3	411.5	8.7	165.9	272.1	398.1	8.2	154.8	290.0	371.5	7.2
	48	213.4	220.7	512.2	13.4	197.1	242.4	473.1	11.5	180.4	266.7	432.9	9.6	174.5	275.5	418.8	9.0	162.9	293.4	390.9	7.9
6215	42	206.0	233.5	494.3	9.2	190.1	256.4	456.2	7.9	173.9	282.2	417.4	6.6	168.2	291.6	403.8	6.2	157.1	310.7	377.0	5.5
9.8	44	212.4	235.7	509.7	9.7	196.0	258.6	470.4	8.3	179.4	284.4	430.6	7.0	173.6	293.8	416.5	6.6	162.1	312.9	389.0	5.8
	45	215.7	236.8	517.8	10.0	199.1	259.8	477.9	8.6	182.3	285.6	437.4	7.3	176.3	294.9	423.2	6.8	164.7	314.0	395.3	6.0
	48	227.2	240.6	545.3	11.1	209.6	263.5	503.1	9.5	191.8	289.3	460.2	8.0	185.5	298.6	445.1	7.5	173.1	317.6	415.5	6.6
6230	42	226.1	239.0	542.7	11.5	209.2	264.7	502.0	9.8	191.3	293.3	459.0	8.2	184.9	303.6	443.6	7.7	172.1	324.6	413.1	6.7
10.2	44	232.6	241.1	558.2	12.1	215.3	266.9	516.7	10.4	197.0	295.5	472.9	8.7	190.5	305.9	457.2	8.2	177.6	327.0	426.1	7.1
	45	235.3	241.9	564.6	12.4	217.8	267.8	522.8	10.7	199.4	296.5	478.5	8.9	192.8	306.8	462.8	8.4	179.8	327.9	431.5	7.3
	48	241.7	244.0	580.2	13.1	223.9	269.9	537.4	11.3	205.1	298.7	492.3	9.5	198.4	309.2	476.2	8.9	185.1	330.4	444.3	7.7
6245	42	240.3	255.1	576.6	14.4	222.1	281.8	533.1	12.2	203.3	311.7	487.8	10.1	196.5	322.5	471.7	9.3	183.3	344.5	439.8	7.9
10.3	44	248.8	257.7	597.0	15.4	230.1	284.5	552.2	13.2	210.6	314.4	505.5	10.9	203.7	325.2	488.9	10.1	190.0	347.3	456.0	8.6
	45	252.8	259.0	606.7	16.0	233.9	285.8	561.3	13.6	214.1	315.7	513.9	11.3	207.1	326.6	497.1	10.5	193.2	348.6	463.7	8.9
	48	264.1	262.5	633.7	17.4	244.4	289.4	586.5	14.9	223.8	319.4	537.2	12.4	216.6	330.3	519.7	11.6	202.1	352.5	485.2	9.9
6260	42	251.0	273.5	602.5	15.7	231.9	301.4	556.6	13.4	212.2	332.8	509.3	11.1	205.3	344.1	492.6	10.3	191.5	367.3	459.6	8.8
10.1	44	260.0	276.3	624.0	16.9	240.3	304.4	576.7	14.4	220.0	335.7	527.9	12.0	212.8	347.1	510.6	11.1	198.6	370.3	476.6	9.5
	45	264.3	277.7	634.4	17.4	244.3	305.8	586.4	14.9	223.7	337.2	536.8	12.4	216.4	348.6	519.3	11.5	202.0	371.7	484.8	9.9
	48	276.3	281.5	663.1	19.0	255.5	309.6	613.2	16.3	234.0	341.1	561.6	13.6	226.4	352.5	543.5	12.7	211.5	375.8	507.6	11.0
6270	42	261.5	291.9	627.6	17.1	241.5	321.1	579.5	14.5	221.0	354.0	530.4	12.1	213.8	365.9	513.1	11.2	199.6	390.3	479.0	9.6
9.9	44	271.0	295.0	650.3	18.3	250.3	324.3	600.6	15.6	229.1	357.2	549.8	13.0	221.6	369.1	531.9	12.2	207.0	393.5	496.8	10.5
	45	275.5	296.5	661.2	18.9	254.5	325.8	610.8	16.2	233.0	358.7	559.2	13.5	225.5	370.7	541.1	12.6	210.6	395.0	505.4	10.9
	48	288.2	300.6	691.7	20.7	266.4	330.0	639.2	17.7	244.0	362.9	585.5	14.9	236.1	374.9	566.6	13.9	220.6	399.2	529.5	12.0
6280	42	271.7	310.3	652.1	18.4	250.8	340.9	601.9	15.7	229.6	375.3	550.9	13.1	222.1	387.9	533.1	12.2	207.5	413.5	498.1	10.5
9.8	44	281.6	313.7	675.8	19.8	260.0	344.3	623.9	16.9	238.0	378.8	571.2	14.1	230.3	391.3	552.7	13.2	215.2	416.8	516.5	11.4
	45	286.4	315.3	687.4	20.4	264.4	346.0	634.6	17.5	242.1	380.4	581.1	14.6	234.3	392.9	562.3	13.7	219.0	418.4	525.5	11.8
	48	299.8	319.7	719.6	22.3	276.9	350.5	664.6	19.1	253.7	384.9	608.8	16.1	245.5	397.4	589.3	15.0	229.6	422.9	551.0	13.1

Table 8

Notes :

Capacity ratings are based on 10ºF range and 0.0001ft².hºF/Btu fouling factor.

* Power input mentioned in this page should not be used for cable or fuse selection. MCA and MFA values given in the electrical data pages (24 to 28) should be referred for the same.

CAPACITY RATINGS - 50 Hz (SI)

Model	LCWT	Condenser Entering Air Temperature °C																			
COP		35				40				45				48				51.7			
		CCap	PI*	WFR	WPD	CCap	PI*	WFR	WPD	CCap	PI*	WFR	WPD	CCap	PI*	WFR	WPD	CCap	PI*	WFR	WPD
	°C	kW	kW	l/s	kPa	kW	kW	l/s	kPa	kW	kW	l/s	kPa	kW	kW	l/s	kPa	kW	kW	l/s	kPa
5008	5	26.3	7.6	1.3	35.8	24.3	8.5	1.2	31.1	22.2	9.6	1.1	26.5	20.9	10.3	1.0	23.7	19.2	11.1	0.9	20.5
3.3	6	27.1	7.7	1.3	38.0	25.1	8.6	1.2	33.0	23.0	9.6	1.1	28.1	21.6	10.3	1.0	25.2	19.9	11.2	0.9	21.8
	7	27.9	7.7	1.3	40.0	25.9	8.6	1.2	34.8	23.7	9.7	1.1	29.6	22.3	10.4	1.1	26.5	20.5	11.2	1.0	22.9
	8	28.7	7.8	1.4	42.0	26.5	8.7	1.3	36.3	24.3	9.7	1.2	31.1	22.9	10.4	1.1	27.9	21.1	11.3	1.0	24.1
5012	5	38.1	12.0	1.8	31.6	35.3	13.2	1.7	27.5	32.4	14.5	1.6	23.6	30.6	15.3	1.5	21.4	28.3	16.4	1.4	18.7
3.1	6	39.4	12.1	1.9	33.6	36.6	13.3	1.7	29.3	33.6	14.6	1.6	25.2	31.6	15.5	1.5	22.6	29.4	16.5	1.4	19.9
	7	40.5	12.3	1.9	35.3	37.6	13.4	1.8	30.8	34.6	14.7	1.7	26.5	32.7	15.6	1.6	23.9	30.2	16.6	1.4	21.0
	8	41.4	12.4	2.0	36.9	38.5	13.5	1.8	32.2	35.4	14.8	1.7	27.6	33.5	15.6	1.6	25.0	31.0	16.7	1.5	21.9
5016	5	48.7	15.3	2.3	30.9	45.3	16.9	2.2	27.0	41.8	18.8	2.0	23.4	39.6	20.0	1.9	21.3	36.9	21.7	1.8	18.9
3.0	6	50.3	15.4	2.4	32.8	46.8	17.1	2.2	28.7	43.2	19.0	2.1	24.8	41.0	20.2	2.0	22.6	38.2	21.9	1.8	20.0
	7	51.9	15.6	2.5	34.6	48.2	17.2	2.3	30.3	44.5	19.1	2.1	26.2	42.2	20.4	2.0	23.8	39.3	22.0	1.9	21.0
	8	53.2	15.7	2.5	36.4	49.5	17.4	2.4	31.8	45.7	19.3	2.2	27.5	43.4	20.5	2.1	25.0	40.4	22.2	1.9	22.1
5020	5	61.3	19.0	2.9	37.8	57.0	20.9	2.7	32.8	52.5	23.1	2.5	28.0	49.7	24.5	2.4	25.2	46.2	26.3	2.2	21.9
3.0	6	63.2	19.1	3.0	40.2	58.8	21.1	2.8	34.8	54.2	23.2	2.6	29.7	51.3	24.6	2.5	26.7	47.6	26.5	2.3	23.2
	7	65.4	19.3	3.1	42.9	60.8	21.2	2.9	37.2	56.1	23.4	2.7	31.7	53.1	24.8	2.5	28.5	49.3	26.7	2.4	24.8
	8	67.4	19.5	3.2	45.7	62.7	21.4	3.0	39.6	57.9	23.6	2.8	33.8	54.8	25.0	2.6	30.4	50.9	26.9	2.4	26.3
5024	5	78.5	22.7	3.8	40.3	73.1	25.0	3.5	35.0	67.4	27.5	3.2	29.8	63.8	29.1	3.0	26.7	59.2	31.2	2.8	23.1
3.2	6	81.0	22.9	3.9	42.9	75.4	25.2	3.6	37.2	69.5	27.7	3.3	31.7	65.8	29.3	3.1	28.5	61.1	31.4	2.9	24.6
	7	83.3	23.1	4.0	45.2	77.8	25.4	3.7	39.6	71.8	27.9	3.4	33.8	68.0	29.5	3.3	30.4	63.2	31.6	3.0	26.3
	8	85.9	23.3	4.1	48.1	80.0	25.6	3.8	41.8	73.8	28.1	3.5	35.7	70.0	29.7	3.3	32.1	65.1	31.8	3.1	27.8
5030	5	100.0	29.1	4.8	42.5	93.1	32.1	4.5	37.0	86.1	35.7	4.1	31.7	81.7	38.1	3.9	28.7	76.3	41.3	3.7	25.1
3.1	6	103.2	29.3	4.9	45.3	96.1	32.4	4.6	39.4	88.9	35.9	4.3	33.8	84.4	38.3	4.0	30.5	78.8	41.5	3.8	26.7
	7	106.7	29.5	5.1	48.3	99.4	32.6	4.8	42.0	91.9	36.2	4.4	36.0	87.3	38.6	4.2	32.6	81.5	41.8	3.9	28.5
	8	109.9	29.8	5.3	51.2	102.4	32.9	4.9	44.6	94.7	36.5	4.5	38.2	89.9	38.9	4.3	34.5	84.0	42.0	4.0	30.2
5040	5	131.8	38.3	6.3	33.1	122.0	42.6	5.8	28.5	111.6	47.3	5.3	24.0	105.0	50.4	5.0	21.3	96.5	54.4	4.6	18.1
3.1	6	136.8	38.7	6.5	35.6	126.7	43.0	6.1	30.7	115.9	47.7	5.5	25.8	109.1	50.8	5.2	23.0	100.4	54.8	4.8	19.5
	7	141.1	39.1	6.7	37.8	130.6	43.3	6.2	32.6	119.6	48.0	5.7	27.5	112.6	51.1	5.4	24.4	103.7	55.1	5.0	20.8
	8	146.5	39.6	7.0	40.6	135.7	43.8	6.5	35.0	124.2	48.5	5.9	29.5	117.0	51.5	5.6	26.3	107.7	55.4	5.2	22.4
5045	5	152.8	46.9	7.3	33.2	142.0	51.5	6.8	28.9	130.6	56.7	6.2	24.7	123.5	60.0	5.9	22.2	114.4	64.4	5.5	19.2
3.0	6	158.6	47.4	7.6	35.7	147.4	52.1	7.1	31.0	135.7	57.2	6.5	26.5	128.3	60.6	6.1	23.8	119.0	64.9	5.7	20.7
	7	163.6	47.9	7.8	37.8	152.1	52.6	7.3	32.9	140.0	57.7	6.7	28.2	132.5	61.0	6.3	25.3	123.0	65.3	5.9	22.0
	8	169.8	48.6	8.1	40.6	157.9	53.2	7.6	35.4	145.4	58.3	7.0	30.2	137.6	61.5	6.6	27.2	127.7	65.6	6.1	23.6
5050	5	159.3	49.2	7.6	36.0	148.1	54.3	7.1	31.3	136.5	60.1	6.5	26.8	129.4	63.9	6.2	24.2	120.3	68.9	5.8	21.3
3.0	6	164.2	49.6	7.9	38.2	152.7	54.8	7.3	33.2	140.8	60.6	6.7	28.4	133.4	64.3	6.4	25.6	124.0	69.3	5.9	22.5
	7	169.1	50.1	8.1	40.5	157.3	55.2	7.5	35.1	145.0	61.0	6.9	30.0	137.4	64.8	6.6	27.1	127.8	69.7	6.1	23.7
	8	174.7	50.6	8.4	43.2	162.4	55.8	7.8	37.4	149.8	61.5	7.2	31.9	141.9	65.3	6.8	28.8	132.1	70.2	6.3	25.2
5055	5	179.8	55.4	8.6	45.7	167.4	60.9	8.0	39.7	154.5	67.1	7.4	33.9	146.4	71.1	7.0	30.6	136.2	76.4	6.5	26.7
3.1	6	185.3	55.9	8.9	48.6	172.5	61.4	8.3	42.1	159.2	67.6	7.6	36.0	150.9	71.7	7.2	32.4	140.4	76.9	6.7	28.2
	7	190.7	56.4	9.1	51.4	177.6	62.0	8.5	44.6	163.9	68.2	7.8	38.1	155.4	72.2	7.4	34.3	144.6	77.5	6.9	29.9
	8	196.8	57.0	9.4	54.8	183.2	62.6	8.8	47.5	169.1	68.8	8.1	40.5	160.3	72.8	7.7	36.5	149.2	78.1	7.1	31.7
5060	5	202.3	62.6	9.7	32.2	188.4	68.6	9.0	27.9	173.9	75.2	8.3	23.9	164.9	79.5	7.9	21.6	153.4	85.1	7.3	19.1
3.1	6	207.7	63.1	9.9	34.0	193.5	69.1	9.3	29.4	178.6	75.8	8.5	25.1	169.3	80.1	8.1	22.7	157.6	85.7	7.5	20.0
	7	213.5	63.7	10.2	35.9	198.8	69.7	9.5	31.1	183.6	76.4	8.8	26.5	174.1	80.8	8.3	23.9	162.1	86.4	7.8	21.0
	8	219.7	64.4	10.5	38.1	204.6	70.4	9.8	32.9	188.9	77.1	9.0	28.0	179.2	81.4	8.6	25.3	166.8	87.1	8.0	22.1
5070	5	237.2	73.6	11.3	44.5	220.4	81.3	10.5	38.3	203.1	90.0	9.7	32.6	192.3	95.7	9.2	29.4	178.7	103.1	8.5	26.0
3.0	6	243.8	74.2	11.7	47.1	226.6	81.9	10.8	40.5	208.7	90.6	10.0	34.3	197.6	96.2	9.5	30.9	183.6	103.6	8.8	27.2
	7	250.9	74.9	12.0	50.0	233.1	82.6	11.2	43.0	214.7	91.2	10.3	36.3	203.3	96.9	9.7	32.6	188.9	104.2	9.0	28.5
	8	259.4	75.7	12.4	53.5	240.9	83.4	11.5	46.0	221.9	92.0	10.6	38.8	210.0	97.6	10.0	34.8	195.1	105.0	9.3	30.2
5075	5	257.6	79.5	12.3	52.8	239.6	87.5	11.5	45.5	221.0	96.5	10.6	38.5	209.3	102.4	10.0	34.5	194.6	110.1	9.3	30.1
3.0	6	264.5	80.1	12.7	55.7	246.1	88.1	11.8	48.1	226.9	97.2	10.9	40.7	214.9	103.1	10.3	36.4	199.8	110.7	9.6	31.6
	7	271.9	80.8	13.0	58.8	252.9	88.8	12.1	50.8	233.2	97.9	11.2	43.0	220.8	103.7	10.6	38.5	205.3	111.4	9.8	33.2
	8	280.6	81.6	13.4	62.5	260.8	89.6	12.5	54.1	240.4	98.7	11.5	45.8	227.7	104.5	10.9	40.9	211.6	112.2	10.1	35.3
5085	5	286.2	87.2	13.7	22.1	266.6	95.7	12.8	19.2	246.1	105.2	11.8	16.3	233.3	111.4	11.2	14.5	217.2	119.5	10.4	12.4
3.1	6	292.6	87.8	14.0	23.1	272.6	96.4	13.0	20.1	251.7	105.9	12.0	17.1	238.6	112.1	11.4	15.2	222.2	120.2	10.6	13.0
	7	300.2	88.6	14.4	24.3	279.6	97.1	13.4	21.1	258.2	106.7	12.3	18.0	244.8	112.9	11.7	16.1	228.0	121.0	10.9	13.8
	8	309.6	89.5	14.8	25.8	288.3	98.1	13.8	22.5	266.2	107.6	12.7	19.1	252.4	113.8	12.1	17.2	235.0	121.9	11.2	14.7

Table 9

Notes:

Capacity ratings are based on 5ºC range and 0.018 m².ºC/kW fouling factor.

* Power input mentioned in this page should not be used for cable or fuse selection. MCA and MFA values given in the electrical data pages (24 to 28) should be referred for the same.

CAPACITY RATINGS - 50 Hz (SI)

Model	LCWT	Condenser Entering Air Temperature °C																			
		35				40				45				48				51.7			
COP		CCap	PI*	WFR	WPD	CCap	PI*	WFR	WPD	CCap	PI*	WFR	WPD	CCap	PI*	WFR	WPD	CCap	PI*	WFR	WPD
	°C	kW	kW	l/s	kPa	kW	kW	l/s	kPa	kW	kW	l/s	kPa	kW	kW	l/s	kPa	kW	kW	l/s	kPa
5090	5	305.7	94.1	14.6	25.2	284.8	103.1	13.6	21.9	263.0	113.1	12.6	18.7	249.3	119.5	11.9	16.7	232.0	127.9	11.1	14.3
3.1	6	312.5	94.8	14.9	26.3	291.2	103.8	13.9	22.9	268.9	113.8	12.9	19.5	254.9	120.3	12.2	17.5	237.3	128.7	11.4	15.1
	7	320.4	95.6	15.3	27.6	298.5	104.6	14.3	24.0	275.6	114.7	13.2	20.5	261.3	121.2	12.5	18.4	243.3	129.6	11.6	15.9
	8	330.0	96.7	15.8	29.2	307.4	105.7	14.7	25.5	283.8	115.7	13.6	21.8	269.1	122.2	12.9	19.6	250.5	130.7	12.0	16.9
5095	5	320.7	98.6	15.3	27.6	298.2	108.8	14.3	23.9	274.8	120.4	13.1	20.5	260.3	128.0	12.5	18.5	242.0	137.9	11.6	16.3
3.0	6	329.8	99.4	15.8	29.2	306.7	109.7	14.7	25.3	282.8	121.3	13.5	21.6	268.0	128.8	12.8	19.5	249.3	138.7	11.9	17.1
	7	336.7	100.1	16.1	30.4	313.2	110.4	15.0	26.4	288.9	121.9	13.8	22.5	273.8	129.5	13.1	20.3	254.8	139.3	12.2	17.8
	8	342.6	100.6	16.4	31.4	318.7	110.9	15.2	27.3	294.0	122.5	14.1	23.3	278.7	130.0	13.3	21.0	259.5	139.9	12.4	18.4
5110	5	361.3	110.9	17.3	35.0	336.2	122.0	16.1	30.3	310.1	134.3	14.8	25.8	293.8	142.4	14.1	23.3	273.1	152.8	13.1	20.2
3.1	6	372.5	112.0	17.8	37.1	346.8	123.1	16.6	32.2	320.1	135.5	15.3	27.5	303.4	143.5	14.5	24.8	282.3	154.0	13.5	21.6
	7	380.8	112.8	18.2	38.8	354.7	123.9	17.0	33.7	327.5	136.3	15.7	28.8	310.5	144.4	14.9	25.9	289.1	154.9	13.8	22.6
	8	387.8	113.5	18.6	40.2	361.3	124.6	17.3	35.0	333.7	137.0	16.0	29.9	316.5	145.1	15.1	26.9	294.9	155.7	14.1	23.4
5120	5	401.0	124.8	19.2	47.9	373.3	136.7	17.9	41.4	344.3	150.0	16.5	34.9	326.1	158.5	15.6	31.0	303.1	169.6	14.5	26.2
3.1	6	414.0	126.1	19.8	51.1	385.4	138.1	18.4	44.2	355.6	151.4	17.0	37.4	336.9	160.0	16.1	33.3	313.3	171.2	15.0	28.3
	7	426.4	127.4	20.4	54.2	397.0	139.4	19.0	47.0	366.4	152.8	17.5	39.8	347.3	161.4	16.6	35.6	323.1	172.6	15.5	30.3
	8	438.1	128.7	21.0	57.1	408.0	140.7	19.5	49.6	376.7	154.1	18.0	42.2	357.1	162.7	17.1	37.7	332.4	174.0	15.9	32.3
5130	5	442.9	133.9	21.2	26.2	411.7	147.7	19.7	22.7	379.5	163.3	18.2	19.4	359.3	173.5	17.2	17.4	333.8	186.8	16.0	15.0
3.0	6	455.5	134.8	21.8	27.7	423.5	148.7	20.3	24.0	390.4	164.3	18.7	20.5	369.7	174.5	17.7	18.4	343.6	187.9	16.4	15.9
	7	468.5	135.9	22.4	29.2	435.7	149.8	20.8	25.4	401.7	165.4	19.2	21.7	380.5	175.6	18.2	19.5	353.7	189.0	16.9	16.8
	8	482.2	137.1	23.1	30.9	448.5	151.0	21.5	26.9	413.6	166.6	19.8	22.9	391.8	176.8	18.7	20.6	364.2	190.1	17.4	17.9
5140	5	467.9	146.7	22.4	29.2	434.5	162.0	20.8	25.3	399.8	179.3	19.1	21.5	378.2	190.6	18.1	19.3	350.9	205.4	16.8	16.6
3.0	6	481.5	147.9	23.0	30.8	447.2	163.2	21.4	26.7	411.7	180.5	19.7	22.7	389.5	191.8	18.6	20.4	361.5	206.6	17.3	17.6
	7	495.3	149.2	23.7	32.5	460.0	164.5	22.0	28.2	423.3	181.8	20.2	24.0	400.7	193.1	19.2	21.6	372.0	207.8	17.8	18.6
	8	509.7	150.5	24.4	34.4	473.4	165.9	22.6	29.8	435.9	183.2	20.8	25.4	412.5	194.4	19.7	22.8	383.0	209.1	18.3	19.7
5155	5	516.4	159.0	24.7	17.7	480.5	175.1	23.0	15.4	443.2	193.2	21.2	13.2	419.9	204.9	20.1	11.9	390.5	220.3	18.7	10.4
3.0	6	533.0	160.5	25.5	18.8	495.9	176.6	23.7	16.3	457.4	194.7	21.9	14.0	433.4	206.5	20.7	12.6	403.1	221.9	19.3	11.0
	7	549.2	162.1	26.3	19.9	511.0	178.2	24.4	17.3	471.4	196.3	22.5	14.8	446.7	208.1	21.4	13.4	415.5	223.4	19.9	11.7
	8	566.5	163.7	27.1	21.2	527.2	179.9	25.2	18.4	486.3	198.0	23.3	15.7	460.9	209.7	22.0	14.2	428.9	225.1	20.5	12.4
5165	5	553.4	172.5	26.5	20.2	515.0	189.5	24.6	17.6	475.0	208.4	22.7	15.0	450.0	220.7	21.5	13.6	418.3	236.7	20.0	11.8
3.0	6	570.8	174.2	27.3	21.5	531.2	191.2	25.4	18.7	490.0	210.2	23.4	16.0	464.2	222.5	22.2	14.4	431.6	238.6	20.6	12.5
	7	587.9	175.9	28.1	22.8	547.1	192.9	26.2	19.8	504.7	212.0	24.1	16.9	478.2	224.3	22.9	15.2	444.7	240.4	21.3	13.3
	8	606.2	177.8	29.0	24.2	564.2	194.8	27.0	21.0	520.5	213.9	24.9	18.0	493.2	226.2	23.6	16.2	458.8	242.3	21.9	14.1
5180	5	603.1	187.3	28.8	32.0	561.2	205.2	26.8	27.9	517.6	225.1	24.8	23.8	490.2	237.9	23.4	21.4	455.5	254.5	21.8	18.6
3.1	6	619.7	189.0	29.6	33.8	576.8	207.0	27.6	29.4	532.1	226.9	25.5	25.1	504.1	239.8	24.1	22.6	468.6	256.5	22.4	19.6
	7	637.2	190.9	30.5	35.7	593.2	208.8	28.4	31.0	547.3	228.9	26.2	26.5	518.5	241.8	24.8	23.9	482.2	258.6	23.1	20.8
	8	655.7	192.9	31.4	37.7	610.5	210.9	29.2	32.8	563.3	230.9	26.9	28.1	533.8	243.9	25.5	25.3	496.6	260.7	23.8	22.0
5190	5	641.5	197.2	30.7	27.6	596.4	217.7	28.5	23.9	549.7	240.8	26.3	20.5	520.6	255.9	24.9	18.5	484.0	275.7	23.2	16.3
3.0	6	659.6	198.8	31.6	29.2	613.5	219.4	29.3	25.3	565.7	242.5	27.1	21.6	535.9	257.6	25.6	19.5	498.6	277.4	23.8	17.1
	7	673.4	200.1	32.2	30.4	626.4	220.7	30.0	26.4	577.8	243.8	27.6	22.5	547.6	258.9	26.2	20.3	509.6	278.7	24.4	17.8
	8	685.1	201.2	32.8	31.4	637.4	221.8	30.5	27.3	588.1	245.0	28.1	23.3	557.5	260.1	26.7	21.0	519.1	279.7	24.8	18.4
5205	5	684.9	208.3	32.8	31.4	637.3	229.4	30.5	27.3	587.9	253.3	28.1	23.3	557.0	268.8	26.6	21.0	518.0	289.1	24.8	18.4
3.1	6	705.3	210.2	33.7	33.3	656.6	231.4	31.4	28.9	605.9	255.2	29.0	24.7	574.4	270.8	27.5	22.3	534.7	291.1	25.6	19.5
	7	720.6	211.6	34.5	34.8	671.0	232.8	32.1	30.2	619.5	256.7	29.6	25.8	587.4	272.3	28.1	23.2	547.1	292.6	26.2	20.3
	8	733.6	212.8	35.1	36.0	683.2	234.1	32.7	31.3	630.9	258.0	30.2	26.7	598.4	273.5	28.6	24.1	557.6	293.9	26.7	21.0
5215	5	722.6	221.9	34.6	35.0	672.4	243.9	32.2	30.3	620.2	268.7	29.7	25.8	587.5	284.7	28.1	23.3	546.2	305.6	26.1	20.2
3.1	6	745.0	224.0	35.6	37.1	693.6	246.1	33.2	32.2	640.2	270.9	30.6	27.5	606.8	287.1	29.0	24.8	564.7	308.1	27.0	21.6
	7	761.6	225.6	36.4	38.8	709.3	247.8	33.9	33.7	654.9	272.7	31.3	28.8	621.0	288.8	29.7	25.9	578.3	309.9	27.7	22.6
	8	775.7	227.0	37.1	40.2	722.6	249.2	34.6	35.0	667.4	274.1	31.9	29.9	633.0	290.3	30.3	26.9	589.7	311.3	28.2	23.4
5230	5	765.2	236.0	36.6	43.6	712.2	258.9	34.1	37.5	657.0	284.6	31.4	31.5	622.4	301.2	29.8	27.8	578.7	322.7	27.7	23.4
3.1	6	790.0	238.4	37.8	46.5	735.4	261.5	35.2	40.1	678.6	287.2	32.5	33.8	643.0	303.9	30.8	30.0	598.1	325.5	28.6	25.3
	7	813.5	240.8	38.9	49.3	757.4	263.9	36.2	42.7	699.1	289.7	33.4	36.1	662.6	306.4	31.7	32.1	616.6	328.1	29.5	27.2
	8	835.7	243.2	40.0	52.0	778.2	266.3	37.2	45.1	718.4	292.0	34.4	38.2	681.2	308.8	32.6	34.1	634.2	330.5	30.3	29.1
5240	5	802.0	249.6	38.4	47.9	746.6	273.4	35.7	41.4	688.6	299.9	32.9	34.9	652.2	317.0	31.2	31.0	606.2	339.1	29.0	26.2
3.1	6	828.0	252.2	39.6	51.1	770.8	276.1	36.9	44.2	711.2	302.8	34.0	37.4	673.8	320.0	32.2	33.3	626.5	342.3	30.0	28.3
	7	852.8	254.9	40.8	54.2	794.1	278.8	38.0	47.0	732.9	305.5	35.1	39.8	694.6	322.8	33.2	35.6	646.2	345.3	30.9	30.3
	8	876.2	257.4	41.9	57.1	816.0	281.4	39.0	49.6	753.4	308.1	36.0	42.2	714.2	325.5	34.2	37.7	664.7	348.0	31.8	32.3

Table 10

Notes:

Capacity ratings are based on 5ºC range and 0.018 m².ºC/kW fouling factor.

* Power input mentioned in this page should not be used for cable or fuse selection. MCA and MFA values given in the electrical data pages (24 to 28) should be referred for the same.

CAPACITY RATINGS - 60 Hz (SI)

Model	LCWT	Condenser Entering Air Temperature °C																			
COP		35				40				45				48				51.7			
		CCap	PI*	WFR	WPD	CCap	PI*	WFR	WPD	CCap	PI*	WFR	WPD	CCap	PI*	WFR	WPD	CCap	PI*	WFR	WPD
	°C	kW	kW	l/s	kPa	kW	kW	l/s	kPa	kW	kW	l/s	kPa	kW	kW	l/s	kPa	kW	kW	l/s	kPa
6010	5	31.9	9.5	1.5	23.0	29.5	10.6	1.4	20.1	26.9	11.8	1.3	17.2	25.3	12.6	1.2	15.6	22.3	13.6	1.1	13.0
3.2	6	32.9	9.5	1.6	24.3	30.4	10.6	1.5	21.2	27.8	11.9	1.3	18.2	26.1	12.7	1.2	16.5	24.0	13.7	1.1	14.5
	7	33.8	9.6	1.6	25.4	31.2	10.7	1.5	22.2	28.6	11.9	1.4	19.0	26.8	12.7	1.3	17.2	24.7	13.8	1.2	15.1
	8	34.5	9.6	1.7	26.4	32.0	10.8	1.5	23.1	29.2	12.0	1.4	19.8	27.5	12.8	1.3	17.9	25.3	13.8	1.2	15.6
6014	5	47.0	14.0	2.2	28.9	43.7	15.3	2.1	25.3	40.2	16.9	1.9	21.9	38.1	17.8	1.8	19.9	35.3	19.1	1.7	17.5
3.0	6	48.5	14.1	2.3	30.6	45.1	15.5	2.2	26.9	41.6	17.0	2.0	23.2	39.4	18.0	1.9	21.1	36.6	19.2	1.7	18.5
	7	49.9	14.2	2.4	32.3	46.5	15.6	2.2	28.3	42.8	17.1	2.0	24.5	40.6	18.1	1.9	22.2	37.7	19.3	1.8	19.6
	8	51.2	14.4	2.4	33.8	47.7	15.7	2.3	29.7	44.0	17.2	2.1	25.6	41.7	18.2	2.0	23.3	38.7	19.4	1.9	20.5
6018	5	59.6	17.8	2.9	35.8	55.5	19.6	2.7	31.1	51.3	21.6	2.5	26.7	48.7	22.9	2.3	24.2	45.5	24.7	2.2	21.2
3.1	6	61.5	18.0	2.9	38.1	57.3	19.8	2.7	33.1	53.0	21.7	2.5	28.4	50.3	23.1	2.4	25.7	46.9	24.8	2.2	22.5
	7	63.7	18.2	3.0	40.8	59.4	20.0	2.8	35.5	54.9	22.0	2.6	30.5	52.1	23.3	2.5	27.6	48.7	25.0	2.3	24.1
	8	65.8	18.4	3.1	43.5	61.3	20.2	2.9	37.9	56.7	22.1	2.7	32.5	53.9	23.5	2.6	29.4	50.3	25.2	2.4	25.7
6022	5	75.8	22.5	3.6	37.7	70.8	24.7	3.4	32.8	65.5	27.0	3.1	28.2	62.2	28.6	3.0	25.4	58.0	30.6	2.8	22.2
3.0	6	78.3	22.7	3.7	40.1	73.1	24.9	3.5	35.0	67.6	27.3	3.2	30.0	64.2	28.8	3.1	27.1	59.9	30.7	2.9	23.6
	7	80.8	22.9	3.9	42.7	75.4	25.1	3.6	37.2	69.8	27.5	3.3	32.0	66.3	29.0	3.2	28.9	61.9	30.9	3.0	25.2
	8	83.1	23.1	4.0	45.0	77.6	25.3	3.7	39.4	71.8	27.7	3.4	33.8	68.2	29.2	3.3	30.5	63.7	31.1	3.0	26.7
6028	5	94.7	27.5	4.5	38.2	88.1	30.2	4.2	33.2	81.3	33.2	3.9	28.3	76.9	35.1	3.7	25.5	71.4	37.6	3.4	22.0
2.9	6	97.6	27.7	4.7	40.6	90.9	30.4	4.3	35.3	83.8	33.4	4.0	30.1	79.4	35.3	3.8	27.1	73.8	37.8	3.5	23.5
	7	100.7	28.0	4.8	43.2	93.8	30.7	4.5	37.5	86.6	33.7	4.1	32.1	82.0	35.6	3.9	28.9	76.3	38.0	3.6	25.1
	8	103.6	28.2	5.0	45.6	96.5	30.9	4.6	39.7	89.1	33.9	4.3	33.9	84.5	35.8	4.0	30.5	78.6	38.2	3.8	26.5
6035	5	120.5	35.5	5.8	30.5	112.3	38.9	5.4	26.8	103.9	42.9	5.0	23.2	98.8	45.5	4.7	21.2	92.3	49.0	4.4	18.7
3.0	6	124.7	35.8	6.0	32.5	116.3	39.3	5.6	28.6	107.7	43.2	5.1	24.8	102.3	45.9	4.9	22.6	95.6	49.4	4.6	20.0
	7	128.8	36.2	6.2	34.4	120.1	39.7	5.7	30.3	111.2	43.6	5.3	26.3	105.7	46.2	5.1	24.0	98.9	49.7	4.7	21.2
	8	132.9	36.6	6.4	36.4	123.9	40.0	5.9	32.1	114.8	44.0	5.5	27.9	109.1	46.6	5.2	25.4	102.0	50.0	4.9	22.5
6045	5	155.3	47.1	7.4	34.3	143.6	52.3	6.9	29.5	131.1	58.0	6.3	24.8	123.2	61.7	5.9	22.0	113.1	66.6	5.4	18.8
2.9	6	161.3	47.6	7.7	36.8	149.1	52.7	7.1	31.7	136.2	58.5	6.5	26.7	128.0	62.2	6.1	23.7	117.6	67.1	5.6	20.2
	7	166.5	48.0	8.0	39.1	153.9	53.1	7.4	33.7	140.6	58.9	6.7	28.4	132.2	62.6	6.3	25.2	121.5	67.5	5.8	21.5
	8	172.8	48.5	8.3	42.0	159.8	53.7	7.6	36.2	146.0	59.4	7.0	30.5	137.3	63.2	6.6	27.1	126.2	68.0	6.0	23.1
6055	5	182.7	56.7	8.7	34.8	169.8	62.2	8.1	30.1	156.2	68.4	7.5	25.6	147.6	72.3	7.1	22.9	136.8	77.4	6.5	19.8
2.9	6	189.6	57.4	9.1	37.3	176.2	62.9	8.4	32.4	162.2	69.0	7.8	27.6	153.4	72.9	7.3	24.7	142.3	77.9	6.8	21.4
	7	195.5	57.9	9.4	39.6	181.8	63.5	8.7	34.4	167.4	69.6	8.0	29.3	158.5	73.5	7.6	26.3	147.1	78.4	7.0	22.8
	8	202.6	58.6	9.7	42.4	188.4	64.2	9.0	36.9	173.6	70.3	8.3	31.4	164.3	74.1	7.9	28.2	152.6	79.0	7.3	24.5
6060	5	196.9	59.6	9.4	30.5	183.7	65.3	8.8	26.5	169.9	71.7	8.1	22.8	161.2	75.8	7.7	20.8	150.2	81.0	7.2	18.5
3.0	6	202.3	60.1	9.7	32.2	188.8	65.8	9.0	28.0	174.6	72.2	8.4	24.0	165.7	76.3	7.9	21.8	154.4	81.5	7.4	19.3
	7	208.1	60.6	10.0	34.1	194.2	66.4	9.3	29.6	179.6	72.7	8.6	25.4	170.5	76.8	8.2	23.0	158.9	82.1	7.6	20.3
	8	214.3	61.2	10.2	36.2	200.0	66.9	9.6	31.4	184.9	73.3	8.8	26.9	175.5	77.4	8.4	24.3	163.6	82.7	7.8	21.3
6065	5	217.9	68.1	10.4	37.5	203.2	74.4	9.7	32.5	188.0	81.3	9.0	27.8	178.6	85.8	8.5	25.1	166.8	91.6	8.0	22.1
3.0	6	223.9	68.6	10.7	39.6	208.7	74.9	10.0	34.3	193.1	81.9	9.2	29.3	183.5	86.4	8.8	26.5	171.4	92.2	8.2	23.2
	7	230.3	69.2	11.0	42.0	214.7	75.5	10.3	36.4	198.7	82.5	9.5	31.0	188.7	87.0	9.0	28.0	176.3	92.8	8.4	24.5
	8	237.1	69.9	11.3	44.6	221.0	76.1	10.6	38.6	204.5	83.1	9.8	32.9	194.3	87.6	9.3	29.7	181.5	93.4	8.7	25.9
6075	5	244.2	78.1	11.7	49.4	227.4	85.0	10.9	43.0	210.5	92.6	10.1	36.1	200.0	97.5	9.6	31.7	187.1	104.0	9.0	25.8
3.0	6	251.6	78.8	12.0	52.3	234.4	85.7	11.2	45.7	216.9	93.3	10.4	38.8	206.3	98.3	9.9	34.4	193.0	104.7	9.2	28.5
	7	258.8	79.5	12.4	55.2	241.2	86.4	11.5	48.3	223.3	94.0	10.7	41.3	212.3	98.9	10.2	36.9	198.6	105.4	9.5	31.1
	8	265.6	80.1	12.7	57.9	247.5	87.0	11.8	50.7	229.1	94.6	11.0	43.6	217.9	99.6	10.4	39.2	203.9	106.0	9.8	33.4
6085	5	297.7	89.6	14.2	23.9	277.8	98.2	13.3	20.9	256.9	107.7	12.3	17.8	243.8	113.9	11.7	15.9	227.1	121.8	10.9	13.7
3.0	6	304.5	90.2	14.6	25.0	284.2	98.8	13.6	21.8	262.8	108.4	12.6	18.7	249.4	114.5	11.9	16.7	232.5	122.4	11.1	14.4
	7	312.3	90.9	14.9	26.3	291.5	99.6	13.9	23.0	269.6	109.1	12.9	19.6	255.9	115.2	12.2	17.7	238.5	123.2	11.4	15.2
	8	322.0	91.8	15.4	27.8	300.4	100.5	14.4	24.4	277.8	110.0	13.3	20.9	263.7	116.2	12.6	18.8	245.7	124.1	11.8	16.2
6095	5	319.8	97.8	15.3	27.5	298.3	106.9	14.3	24.0	276.0	117.0	13.2	20.6	262.2	123.5	12.5	18.6	244.8	132.0	11.7	16.1
3.0	6	327.1	98.4	15.6	28.7	305.2	107.6	14.6	25.1	282.4	117.7	13.5	21.6	268.3	124.2	12.8	19.5	250.5	132.6	12.0	16.9
	7	335.5	99.2	16.0	30.1	312.9	108.3	15.0	26.4	289.6	118.4	13.9	22.7	275.1	125.0	13.2	20.5	256.8	133.4	12.3	17.8
	8	345.7	100.1	16.5	31.9	322.4	109.2	15.4	27.9	298.3	119.4	14.3	24.0	283.3	125.9	13.6	21.7	264.4	134.3	12.6	18.9
6105	5	341.6	107.3	16.3	14.9	318.3	117.0	15.2	13.0	294.5	127.7	14.1	11.2	279.8	134.7	13.4	10.2	261.4	143.7	12.5	9.0
3.0	6	351.9	108.2	16.8	15.8	328.0	117.9	15.7	13.8	303.5	128.7	14.5	11.9	288.4	135.7	13.8	10.8	269.4	144.7	12.9	9.5
	7	362.4	109.2	17.3	16.8	337.8	118.9	16.2	14.6	312.5	129.7	14.9	12.6	297.0	136.6	14.2	11.4	277.5	145.6	13.3	10.1
	8	373.6	110.2	17.9	17.8	348.2	119.9	16.7	15.5	322.2	130.7	15.4	13.3	306.2	137.7	14.6	12.1	286.1	146.7	13.7	10.7

Table 11

Notes:

Capacity ratings are based on 5ºC range and 0.018 m².ºC/kW fouling factor.

* Power input mentioned in this page should not be used for cable or fuse selection. MCA and MFA values given in the electrical data pages (24 to 28) should be referred for the same.

CAPACITY RATINGS - 60 Hz (SI)

Model	LCWT	Condenser Entering Air Temperature °C																			
		35				40				45				48				51.7			
		CCap	PI	WFR	WPD	CCap	PI	WFR	WPD	CCap	PI	WFR	WPD	CCap	PI	WFR	WPD	CCap	PI	WFR	WPD
COP	°C	kW	kW	l/s	kPa	kW	kW	l/s	kPa	kW	kW	l/s	kPa	kW	kW	l/s	kPa	kW	kW	l/s	kPa
6110	5	360.3	116.6	17.2	16.6	335.6	126.8	16.1	14.4	310.5	138.3	14.9	12.4	295.1	145.7	14.1	11.3	276.0	155.3	13.2	10.0
2.9	6	371.2	117.6	17.8	17.6	345.8	127.9	16.5	15.3	320.0	139.4	15.3	13.2	304.2	146.8	14.5	12.0	284.5	156.4	13.6	10.5
	7	382.3	118.7	18.3	18.6	356.1	129.0	17.0	16.2	329.5	140.4	15.8	13.9	313.2	147.8	15.0	12.6	293.0	157.4	14.0	11.1
	8	394.1	119.8	18.9	19.7	367.1	130.1	17.6	17.2	339.7	141.5	16.3	14.8	322.9	148.9	15.4	13.4	302.0	158.5	14.4	11.8
6120	5	390.7	118.9	18.7	45.5	364.2	130.4	17.4	39.3	336.4	143.0	16.1	33.2	319.0	151.1	15.3	29.5	296.7	161.6	14.2	24.9
3.0	6	403.7	120.1	19.3	48.6	376.4	131.6	18.0	42.1	347.9	144.2	16.6	35.7	329.9	152.4	15.8	31.8	307.1	162.9	14.7	27.0
	7	416.0	121.2	19.9	51.6	388.0	132.7	18.6	44.8	358.7	145.4	17.2	38.1	340.2	153.6	16.3	34.0	316.9	164.1	15.2	29.0
	8	427.5	122.2	20.4	54.4	398.8	133.8	19.1	47.4	368.8	146.5	17.6	40.4	349.9	154.7	16.7	36.2	326.1	165.3	15.6	31.0
6130	5	430.4	135.7	20.6	55.2	400.9	148.2	19.2	47.9	370.5	162.1	17.7	40.8	351.6	171.0	16.8	36.5	327.9	182.6	15.7	31.4
3.0	6	445.0	137.0	21.3	58.9	414.5	149.6	19.8	51.2	383.1	163.4	18.3	43.7	363.7	172.4	17.4	39.2	339.2	184.0	16.2	33.8
	7	459.0	138.3	22.0	62.6	427.7	150.9	20.5	54.5	395.5	164.8	18.9	46.6	375.5	173.7	18.0	41.9	350.3	185.3	16.8	36.2
	8	472.3	139.5	22.6	66.1	440.2	152.1	21.1	57.7	407.2	166.0	19.5	49.4	386.7	175.0	18.5	44.5	360.9	186.6	17.3	38.6
6140	5	465.6	154.0	22.3	64.3	433.3	167.6	20.7	55.9	400.5	182.8	19.2	47.8	380.4	192.7	18.2	43.1	355.3	205.5	17.0	37.3
2.9	6	481.2	155.5	23.0	68.5	447.8	169.2	21.4	59.6	414.0	184.4	19.8	51.1	393.1	194.2	18.8	46.0	367.1	207.0	17.6	40.0
	7	496.8	157.0	23.8	72.9	462.4	170.7	22.1	63.4	427.5	185.9	20.4	54.4	406.1	195.8	19.4	49.1	379.3	208.5	18.1	42.8
	8	511.7	158.4	24.5	77.1	476.4	172.1	22.8	67.2	440.6	187.4	21.1	57.7	418.6	197.2	20.0	52.2	391.1	210.0	18.7	45.6
6160	5	524.4	159.9	25.1	36.3	487.8	175.3	23.3	31.6	449.7	192.5	21.5	27.0	425.5	203.6	20.4	24.3	394.7	218.0	18.9	20.9
3.0	6	541.4	161.3	25.9	38.6	504.2	176.9	24.1	33.7	465.4	194.1	22.3	28.9	440.8	205.1	21.1	26.0	409.6	219.4	19.6	22.5
	7	557.4	162.7	26.7	40.9	519.3	178.3	24.8	35.6	479.4	195.4	22.9	30.6	454.3	206.5	21.7	27.5	422.3	220.7	20.2	23.9
	8	573.9	164.1	27.5	43.2	534.7	179.7	25.6	37.7	493.9	196.9	23.6	32.4	468.1	207.9	22.4	29.2	435.3	222.1	20.8	25.3
6175	5	574.1	177.3	27.5	21.8	535.1	194.4	25.6	19.0	494.2	213.4	23.6	16.2	468.5	225.6	22.4	14.6	435.9	241.3	20.8	12.8
3.0	6	592.5	178.9	28.3	23.1	552.2	196.1	26.4	20.2	510.1	215.1	24.4	17.3	483.6	227.3	23.1	15.6	450.0	243.0	21.5	13.6
	7	610.5	180.5	29.2	24.6	569.1	197.8	27.2	21.4	525.8	216.8	25.1	18.3	498.5	229.0	23.8	16.5	464.0	244.7	22.2	14.4
	8	629.7	182.3	30.1	26.1	587.1	199.6	28.1	22.7	542.4	218.6	25.9	19.5	514.4	230.8	24.6	17.5	478.8	246.6	22.9	15.3
6190	5	628.8	194.6	30.1	34.7	585.7	212.8	28.0	30.3	541.2	232.9	25.9	26.0	513.4	245.8	24.6	23.4	478.4	262.6	22.9	20.4
3.0	6	646.9	196.2	30.9	36.7	602.8	214.4	28.8	32.0	557.2	234.6	26.7	27.5	528.7	247.5	25.3	24.8	492.8	264.3	23.6	21.6
	7	665.8	197.9	31.8	38.8	620.5	216.1	29.7	33.9	573.6	236.3	27.4	29.1	544.3	249.3	26.0	26.2	507.4	266.1	24.3	22.9
	8	685.8	199.7	32.8	41.1	639.1	217.9	30.6	35.9	590.9	238.1	28.3	30.8	560.9	251.1	26.8	27.8	523.0	267.9	25.0	24.3
6200	5	664.5	212.8	31.8	38.7	618.5	232.0	29.6	33.6	571.5	253.5	27.3	28.8	542.3	267.3	25.9	26.1	505.8	285.3	24.2	22.8
2.9	6	683.9	214.6	32.7	40.9	636.7	233.9	30.5	35.6	588.4	255.4	28.1	30.5	558.6	269.2	26.7	27.6	521.1	287.2	24.9	24.1
	7	703.8	216.4	33.7	43.3	655.3	235.8	31.3	37.6	605.7	257.3	29.0	32.3	574.9	271.1	27.5	29.2	536.4	289.0	25.7	25.5
	8	725.1	218.4	34.7	45.8	675.2	237.8	32.3	39.9	624.1	259.2	29.9	34.2	592.5	273.1	28.3	30.9	552.8	291.0	26.4	27.0
6215	5	707.1	231.8	33.8	32.1	657.6	252.2	31.5	27.9	607.3	275.0	29.1	23.9	576.3	289.7	27.6	21.6	537.4	308.8	25.7	18.9
2.9	6	727.5	233.8	34.8	34.0	676.8	254.3	32.4	29.5	625.4	277.1	29.9	25.3	593.8	291.8	28.4	22.9	554.3	311.0	26.5	20.1
	7	748.2	235.8	35.8	35.9	696.2	256.3	33.3	31.2	643.4	279.1	30.8	26.8	610.9	293.9	29.2	24.2	570.4	313.0	27.3	21.2
	8	770.0	237.9	36.8	37.9	716.5	258.4	34.3	33.0	662.2	281.2	31.7	28.3	628.8	295.9	30.1	25.6	587.0	315.0	28.1	22.4
6230	5	775.3	237.2	37.1	40.2	722.4	260.1	34.6	34.9	667.0	285.4	31.9	29.8	632.1	301.6	30.2	26.8	587.8	322.5	28.1	23.3
3.0	6	801.4	239.6	38.3	42.9	747.5	262.6	35.8	37.4	690.9	287.9	33.0	32.0	655.3	304.2	31.3	28.8	610.2	325.2	29.2	25.0
	7	820.6	241.3	39.3	44.9	765.8	264.4	36.6	39.2	708.2	289.8	33.9	33.6	672.1	306.1	32.1	30.3	626.3	327.2	30.0	26.3
	8	836.5	242.8	40.0	46.6	780.9	265.9	37.4	40.7	722.5	291.4	34.6	34.9	685.9	307.7	32.8	31.5	639.5	328.9	30.6	27.4
6245	5	824.2	253.2	39.4	50.6	768.2	277.1	36.7	43.9	710.0	303.5	34.0	37.3	673.6	320.5	32.2	33.3	627.7	342.5	30.0	28.4
3.0	6	852.0	255.7	40.8	54.1	794.2	279.6	38.0	47.0	734.3	306.1	35.1	40.0	696.8	323.1	33.3	35.8	649.5	345.1	31.1	30.7
	7	878.5	258.1	42.0	57.4	819.2	282.0	39.2	50.0	757.6	308.5	36.2	42.7	719.1	325.6	34.4	38.3	670.6	347.6	32.1	33.0
	8	903.6	260.3	43.2	60.6	842.8	284.3	40.3	52.9	779.6	310.8	37.3	45.3	740.2	327.9	35.4	40.7	690.6	350.0	33.0	35.1
6260	5	860.8	271.4	41.2	55.2	801.7	296.4	38.4	47.9	741.0	324.1	35.4	40.8	703.3	342.0	33.6	36.5	655.9	365.2	31.4	31.4
3.0	6	889.9	274.1	42.6	58.9	829.0	299.1	39.7	51.2	766.3	326.9	36.7	43.7	727.4	344.8	34.8	39.2	678.5	367.9	32.5	33.8
	7	918.0	276.7	43.9	62.6	855.4	301.7	40.9	54.5	791.0	329.5	37.8	46.6	750.9	347.4	35.9	41.9	700.7	370.6	33.5	36.2
	8	944.7	279.1	45.2	66.1	880.5	304.2	42.1	57.7	814.4	332.0	39.0	49.4	773.4	349.9	37.0	44.5	721.9	373.1	34.5	38.6
6270	5	896.5	289.6	42.9	59.7	834.5	315.8	39.9	51.9	771.3	344.8	36.9	44.3	732.3	363.6	35.0	39.8	683.5	388.1	32.7	34.4
2.9	6	926.7	292.5	44.3	63.7	862.8	318.7	41.3	55.4	797.5	347.8	38.1	47.4	757.2	366.5	36.2	42.6	706.7	390.9	33.8	36.9
	7	956.4	295.3	45.7	67.7	890.6	321.5	42.6	59.0	823.4	350.6	39.4	50.5	781.9	369.4	37.4	45.5	730.0	393.7	34.9	39.5
	8	984.6	297.9	47.1	71.6	917.1	324.2	43.9	62.4	848.2	353.3	40.6	53.6	805.6	372.1	38.5	48.4	752.4	396.4	36.0	42.1
6280	5	931.2	307.9	44.5	64.3	866.6	335.2	41.5	55.9	801.0	365.7	38.3	47.8	760.8	385.4	36.4	43.1	710.6	411.0	34.0	37.3
2.9	6	962.5	311.0	46.0	68.5	895.7	338.3	42.8	59.6	828.0	368.8	39.6	51.1	786.3	388.5	37.6	46.0	734.3	414.0	35.1	40.0
	7	993.6	314.0	47.5	72.9	924.8	341.4	44.2	63.4	855.0	371.8	40.9	54.4	812.1	391.5	38.8	49.1	758.6	417.0	36.3	42.8
	8	1023.4	316.9	49.0	77.1	952.8	344.3	45.6	67.2	881.1	374.7	42.1	57.7	837.1	394.4	40.0	52.2	782.2	419.9	37.4	45.6

Table 12

Notes:

Capacity ratings are based on 5°C range and 0.018 m².°C/kW fouling factor.

* Power input mentioned in this page should not be used for cable or fuse selection. MCA and MFA values given in the electrical data pages (24 to 28) should be referred for the same.

Capacity Correction & Limits

Evaporator Chiller Limits of Operation

Maximum LCWT : 48°F (8.9°C)
Maximum ECWT : 76°F (24.4°C)*
Minimum LCWT : 41°F (5°C)
For Lower LCWT ethylene glycol solution to be used consult SKM.
(*For short periods.)

Range & Flow Limits

Range limit 8°F - 16°F (4.4°C - 8.9°C) except where limited by water flow rate limits for evaporator. For minimum & maximum water flow rate refer to page 13.

Working & Test Pressures

Evaporator Pressure			
Maximum Working Pressure		Refrigerant	Water
5008/6010 to 5045/6055	psig	493	421
	kPa	3400	2900
5050/6060 to 5240/6280	psig	421	145
	kPa	2900	1000
Test Pressure		Refrigerant	Water
5008/6010 to 5045/6055	psig	1001	1001
	kPa	6900	6900
5050/6060 to 5240/6280	psig	602	207
	kPa	4150	1430

Condenser Pressure		Refrigerant
Maximum Working Pressure	psig	630
	kPa	4344
Test Pressure	psig	715
	kPa	4930

Table 13

Cooler Fouling Factors

The units are rated at 0.0001 ft².h.°F/Btu (0.018m².°C/KW). Other than this fouling factor use SKM Air Cooled Chiller Selection Software to determine the unit performance.

An increase in the fouling factor, results in decrease in the unit capacity and efficiency.

Altitude Correction Factor

The units ratings are based on sea level. Above sea level apply the following correction factors:

Altitude		Capacity Multiplier	Power Multiplier
Feet	Meters		
0	0	1	1
2000	610	0.99	1.01
4000	1219	0.98	1.02
6000	1829	0.97	1.03
8000	2438	0.96	1.04
10000	3048	0.95	1.05

Table 14

Range Correction Factors

Capacity ratings are based on 10°F (IP) and 5°C(SI) chilled water range. For other than this range please use correction factor below.

Range		Capacity Multiplier	Power Multiplier
°F (IP)	°C (SI)		
8	3.9	0.995	0.998
10	5	1	1
12	6.1	1.005	1.002
14	7.2	1.01	1.004
16	8.3	1.015	1.006

Table 15

Capacity Control Steps

Model ACMR		Steps
5008	6010	100 - 0
5012	6014	100 - 0
5016	6018	100 - 0
5020	6022	100 - 0
5024	6028	100 - 50 - 0
5030	6035	100 - 50 - 0
5040	6045	100 - 75 - 50 - 25 - 0
5045	6055	100 - 75 - 50 - 25 - 0
5050	6060	100 - 50 - 0
5055	6065	100 - 66 - 0
5060	6075	100 - 50 - 0
5070	6085	100 - 67 - 33 - 0
5075	6095	100 - 69 - 39 - 0
5085	6105	100 - 72 - 36 - 0
5090	6110	100 - 67 - 33 - 0
5095	6120	100 - 75 - 50 - 25 - 0
5110	6130	100 - 78 - 50 - 28 - 0
5120	6140	100 - 75 - 50 - 25 - 0
5130	6160	100 - 86 - 68 -50 - 36 - 18 - 0
5140	6175	100 - 83 - 67 - 50 - 33 - 17 - 0
5155	6190	100 - 85 - 69 - 50 - 35 - 19 - 0
5165	6200	100 - 86 - 68 - 50 - 36 - 18 - 0
5180	6215	100 - 83 - 67 - 50 - 33 - 17 - 0
5190	6230	100 - 88 - 75 - 63 - 50 - 38 - 25 - 13 - 0
5205	6245	100 - 88 - 77 - 65 - 50 - 38 - 27 - 15 - 0
5215	6260	100 - 89 - 78 - 64 - 50 - 39 - 28 - 14 - 0
5230	6270	100 - 90 - 76 - 63 - 50 - 40 - 26 - 13 - 0
5240	6280	100 - 88 - 75 - 63 - 50 - 38 - 25 - 13 - 0

Table 16

Evaporator Water Pressure Drop

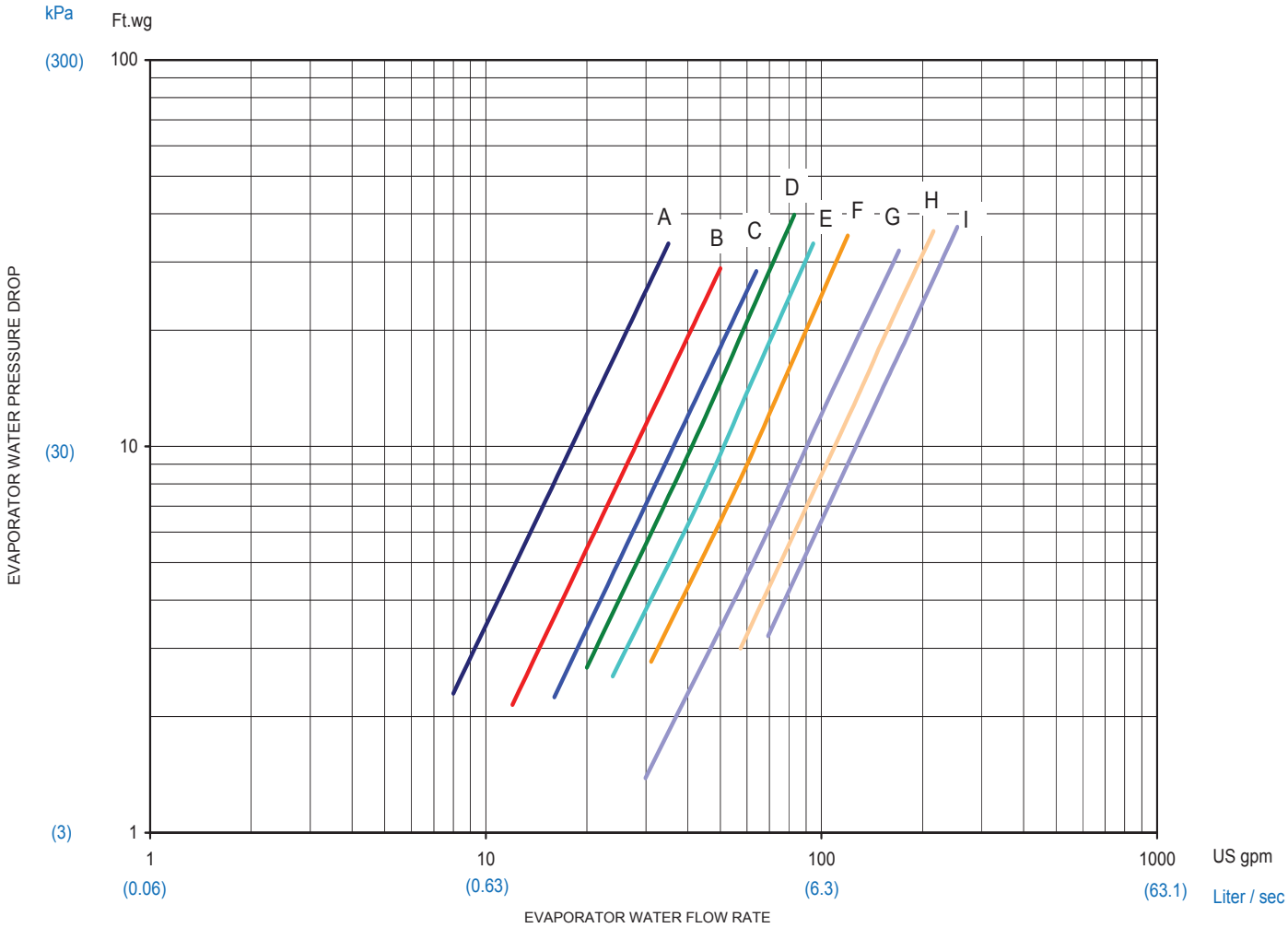

Graph	ACMR Models		Water Flow Rate			
	50 Hz	60 Hz	Minimum		Maximum	
			US gpm	L/s	US gpm	L/s
A	5008	-	8.0	0.5	35.0	2.2
B	5012	6010	12.0	0.8	50.0	3.2
C	5016	6014	16.0	1.0	64.0	4.0
D	5020	6018	20.0	1.3	83.0	5.2
E	5024	6022	24.0	1.5	95.0	6.0
F	5030	6028	30.0	1.9	130.0	8.2
G	5040	6035	30.0	1.9	150.0	9.5
H	5045	6045	57.0	3.6	170.0	10.7
I	-	6055	70.0	4.4	180.0	11.4
J	5050, 5055	-	51.9	3.3	150.5	9.5
K	5060	6060, 6065	75.7	4.8	248.6	15.7
	5070, 5075	6075	95.9	6.1	277.2	17.5
L	5085, 5090, 5095, 5110, 5130, 5140	6085, 6095, 6160	186.1	11.7	475.2	30.0
	5190, 5205, 5215	6230				
M	5120	6105, 6110, 6120, 6130, 6140	178.2	11.2	475.2	30.0
	5230, 5240	6245, 6260, 6270, 6280				
N	5180	6190, 6200	193.6	12.2	541.2	34.1
O	5155, 5165	6175. 6215	250.8	15.8	668.8	42.2

Table 17

Note : To calculate the water pressure drop for shaded models, use the indicated graph and halve the WFR as the evaporators are connected in parallel.

Evaporator Water Pressure Drop

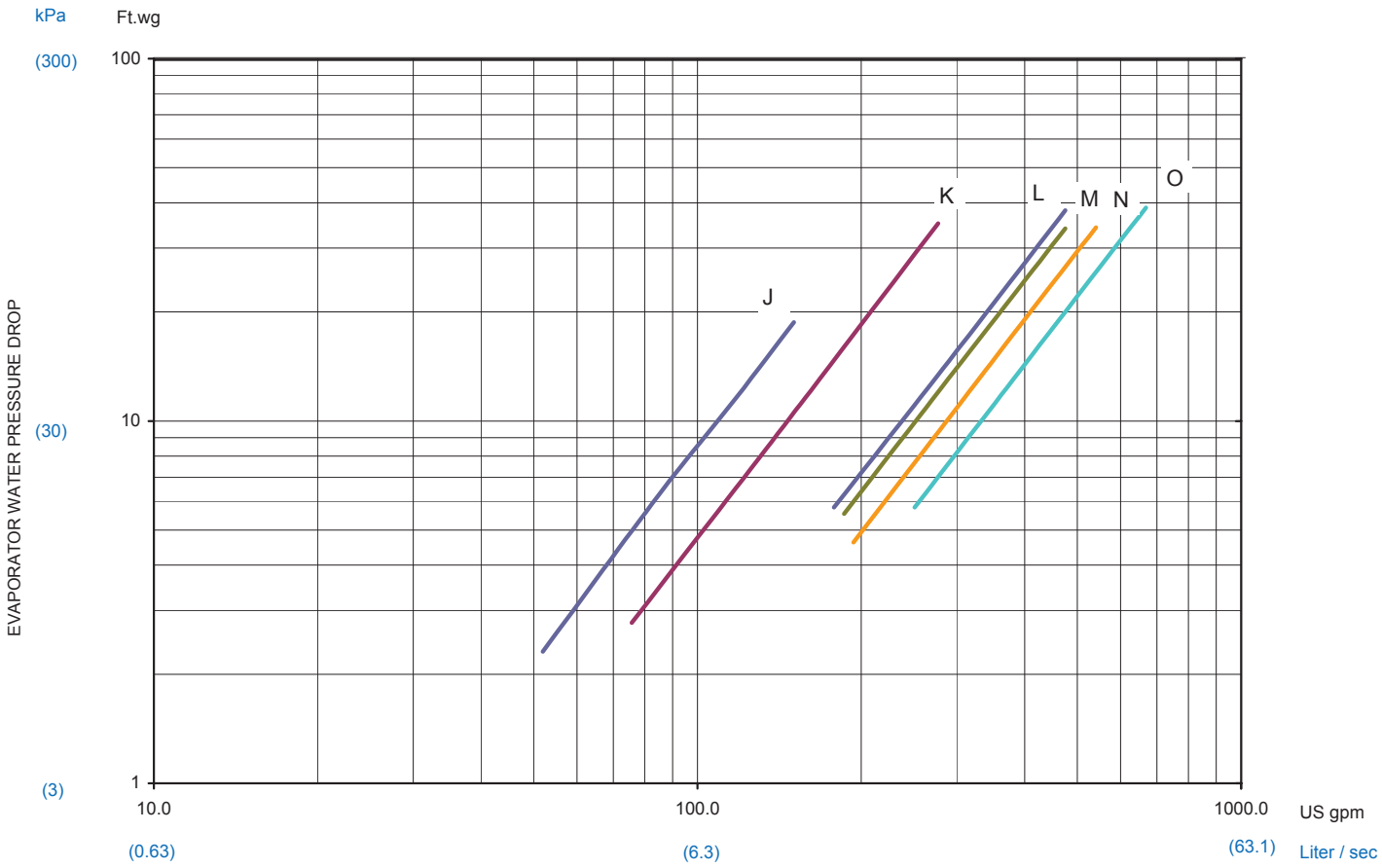

Graph	ACMR Models		Water Flow Rate			
	50 Hz	60 Hz	Minimum		Maximum	
			US gpm	L/s	US gpm	L/s
A	5008	-	8.0	0.5	35.0	2.2
B	5012	6010	12.0	0.8	50.0	3.2
C	5016	6014	16.0	1.0	64.0	4.0
D	5020	6018	20.0	1.3	83.0	5.2
E	5024	6022	24.0	1.5	95.0	6.0
F	5030	6028	30.0	1.9	130.0	8.2
G	5040	6035	30.0	1.9	150.0	9.5
H	5045	6045	57.0	3.6	170.0	10.7
I	-	6055	70.0	4.4	180.0	11.4
J	5050, 5055	-	51.9	3.3	150.5	9.5
K	5060	6060, 6065	75.7	4.8	248.6	15.7
	5070, 5075	6075	95.9	6.1	277.2	17.5
L	5085, 5090, 5095, 5110, 5130, 5140	6085, 6095, 6160	186.1	11.7	475.2	30.0
	5190, 5205, 5215	6230				
M	5120	6105, 6110, 6120, 6130, 6140	178.2	11.2	475.2	30.0
	5230, 5240	6245, 6260, 6270, 6280				
N	5180	6190, 6200	193.6	12.2	541.2	34.1
O	5155, 5165	6175. 6215	250.8	15.8	668.8	42.2

Table 17

Note : To calculate the water pressure drop for shaded models, use the indicated graph and halve the WFR as the evaporators are connected in parallel.

Selection Procedure

ACMR Chillers should be selected with specific Design Considerations, requirements and parameters of the intended application. Care and good engineering should lead to an efficient and cost effective selection. Sample procedures are shown below:

Example 1: (IP System)

Select an Air Cooled Package Chiller giving a capacity of 30 TR to cool water from 54ºF to 44ºF at 2000 ft. altitude, 0.0001 fouling factor, power supply 415V/3Ph/50Hz and 115 ºF ambient Temperature.

Find compressor power input in kW.

Selection:

Apply the following factors to convert the required capacity to tabulated capacity ratings.

	Capacity Multiplier	Power Multiplier
Altitude	0.99	1.01

$$\text{Tabulated rated capacity} = \frac{30}{0.99}$$

$$= 30.3 \text{ TR}$$

Refer to capacity rating 50Hz under 115 ºF condenser entering air temperature and select a chiller giving a capacity nearest larger to 30.3 TR at 44 ºF LCWT. Select model ACMR 5040 giving a capacity of 33.1 TR and PI = 49.1 kW.

Apply correction factors to the selected unit to find actual capacity and P I.

Capacity = 33.1 x 0.99
= 32.8 TR

P I = 49.1 x 1.01
= 49.6 kW

Calculation of Water Flow Rate (WFR)

To calculate the water flow rate to be circulated, use the following:

$$\text{WFR (US gpm)} = \frac{\text{C.CAP (TR)} \times 24}{\text{Range (ºF)}}$$

$$= \frac{32.8 \times 24}{10} = 78.7 \text{ US gpm}$$

Example 2: (SI System)

Select an Air Cooled Package Chiller giving a capacity of 100 kW of refrigeration to cool water from 12ºC to 7ºC at 610M altitude, 0.018 fouling factor, power supply 380V/3Ph/60Hz and 40 ºC ambient Temperature.

Find compressor power input in kW.

Selection:

Apply the following factors to convert the required capacity to tabulated capacity ratings.

	Capacity Multiplier	Power Multiplier
Altitude	0.99	1.01

$$\text{Tabulated rated capacity} = \frac{100}{0.99}$$

$$= 101 \text{ kW}$$

Refer to capacity rating 60Hz under 40 ºC condenser entering air temperature and select a chiller giving a capacity nearest larger to 101 at 7 ºC LCWT. Select model ACMR 6035 giving a capacity of 120.1 kW and PI = 39.7 kW.

Apply correction factors to the selected unit to find actual capacity and P I.

Capacity = 120.1 x 0.99
= 118.9 kW

P I = 39.7 x 1.01
= 40.1 kW

Calculation of Water Flow Rate (WFR)

To calculate the water flow rate to be circulated, use the following:

$$\text{WFR (L/s)} = \frac{\text{C.CAP (kW)} \times 0.239}{\text{Range (ºC)}}$$

$$= \frac{118.9 \times 0.239}{5} = 5.68 \text{ l/s.}$$

For more details refer to other specifications and dimensional drawings for the selected model.

ELECTRICAL DATA

Power Supply : 380-415V/3PH/50Hz

Model ACMR	Unit Characterisitc			Compressor			Condenser Fan Motor		
	MFA	MCA	ICF	QTY	RLA	LRA	QTY	FLA	LRA
5008	50	27	123	1	20	118	2	1.1	3.9
5012	80	37	178	1	28	173	2	1.1	3.9
5016	100	47	236	1	34	225	2	2.4	8.9
5020	125	66	287	1	47	272	2	3.5	11.2
5024	125	74	219	2	28	173	3	3.5	11.2
5030	125	88	284	2	34	225	3	3.9	17.2
5040	160	122	244	4	25	140	4	3.9	17.2
5045	200	135	286	4	28	173	4	3.9	17.2
5050	250	152	402	2	61	310	4	3.7	20
5055	315	178	500	1 + 1	82 + 61	408 + 310	4	3.7	20
5060	315	199	521	2	82	408	4	3.7	20
5070	315	220	471	3	61	310	6	3.7	20
5075	400	247	569	1 + 2	82 + 61	408 + 310	6	3.7	20
5085	400	268	590	2 + 1	82 + 61	408 + 310	6	3.7	20
5090	400	289	611	3	82	408	6	3.7	20
5095	400	289	539	4	61	310	8	3.7	20
5110	500	336	658	2 + 2	82 + 61	408 + 310	8	3.7	20
5120	500	378	700	4	82	408	8	3.7	20
5130	500	398	648	4 + 2	61 + 47	310 + 272	12	3.7	20
5140	500	426	676	6	61	310	12	3.7	20
5155	630	473	795	2 + 4	82 + 61	408 + 310	12	3.7	20
5165	630	515	837	4 + 2	82 + 61	408 + 310	12	3.7	20
5180	800	557	879	6	82	408	12	3.7	20
5190	630	562	813	8	61	310	16	3.7	20
5205	800	610	932	2 + 6	82 + 61	408 + 310	16	3.7	20
5215	800	652	974	4 + 4	82 + 61	408 + 310	16	3.7	20
5230	800	694	1016	6 + 2	82 + 61	408 + 310	16	3.7	20
5240	1000	736	1058	8	82	408	16	3.7	20

Table 18

Legend

MFA Maximum Fuse Amps (for fuse sizing), complies with NEC Article 440-22 & 430-52.

MCA Minimum Circuit Amps.(for wire sizing), complies with NEC article 440-33.

ICF Maximum Instantaneous Current Flow

RLA Rated Load Amps.
LRA Locked Rotor Amps
FLA Full Load Amps

Note :
Voltage imbalance not to exceed ± 2 % of the rated voltage

ELECTRICAL DATA

Power Supply : 440V/3PH/50Hz

Model ACMR	Unit Characterisitc			Compressor			Condenser Fan Motor		
	MFA	MCA	ICF	QTY	RLA	LRA	QTY	FLA	LRA
5008	50	27	122	1	20	118	2	0.95	3.42
5012	80	37	177	1	28	173	2	0.95	3.42
5016	100	47	235	1	34	225	2	2.1	7.6
5020	125	65	285	1	47	272	2	3.1	9.9
5024	100	72	217	2	28	173	3	3.1	9.9
5030	125	87	281	2	34	225	3	3.5	14.7
5040	160	120	240	4	25	140	4	3.5	14.7
5045	200	133	282	4	28	173	4	3.5	14.7
5050	Please Consult SKM								
5055									
5060									
5070									
5075									
5085									
5090									
5095									
5110									
5120									
5130									
5140									
5155									
5165									
5180									
5190									
5205									
5215									
5230									
5240									

Table 19

Legend

MFA Maximum Fuse Amps (for fuse sizing), complies with NEC Article 440-22 & 430-52.

MCA Minimum Circuit Amps.(for wire sizing), complies with NEC article 440-33.

ICF Maximum Instantaneous Current Flow

RLA Rated Load Amps.
LRA Locked Rotor Amps
FLA Full Load Amps

Note :
Voltage imbalance not to exceed ± 2 % of the rated voltage

ELECTRICAL DATA

Power Supply : 380V/3PH/60Hz

Model ACMR	Unit Characterisitc			Compressor			Condenser Fan Motor		
	MFA	MCA	ICF	QTY	RLA	LRA	QTY	FLA	LRA
6010	80	37	151	1	27	145	2	1.5	4.5
6014	100	54	209	1	38	196	2	3.1	9.6
6018	125	60	303	1	43	290	2	3.1	9.6
6022	160	83	376	1	58	353	2	5.3	17.5
6028	160	101	262	2	38	196	3	5.3	17.5
6035	160	113	361	2	43	290	3	5.3	17.5
6045	200	149	262	4	30	139	4	5.3	17.5
6055	250	183	343	4	38	196	4	5.3	17.5
6060	315	189	466	2	77	358	4	3.9	19
6065	315	214	672	1 + 1	97 + 77	564 + 358	4	3.9	19
6075	400	234	692	2	97	564	4	3.9	19
6085	400	274	551	3	77	358	6	3.9	19
6095	400	299	757	1 + 2	97 + 77	564 + 358	6	3.9	19
6105	500	319	777	2 + 1	97 + 77	564 + 358	6	3.9	19
6110	500	339	797	3	97	564	6	3.9	19
6120	500	358	635	4	77	358	8	3.9	19
6130	500	403	861	2 + 2	97 + 77	564 + 358	8	3.9	19
6140	630	443	901	4	97	564	8	3.9	19
6160	630	490	767	4 + 2	77 + 58	358 + 353	12	3.9	19
6175	630	528	805	6	77	358	12	3.9	19
6190	800	573	1031	2 + 4	97 + 77	564 + 358	12	3.9	19
6200	800	613	1071	4 + 2	97 + 77	564 + 358	12	3.9	19
6215	800	653	1111	6	97	564	12	3.9	19
6230	800	698	975	8	77	358	16	3.9	19
6245	1000	743	1201	2 + 6	97 + 77	564 + 358	16	3.9	19
6260	1000	783	1241	4 + 4	97 + 77	564 + 358	16	3.9	19
6270	1000	823	1281	6 + 2	97 + 77	564 + 358	16	3.9	19
6280	1000	863	1321	8	97	564	16	3.9	19

Table 20

Legend

MFA Maximum Fuse Amps (for fuse sizing), complies with NEC Article 440-22 & 430-52.

MCA Minimum Circuit Amps.(for wire sizing), complies with NEC article 440-33.

ICF Maximum Instantaneous Current Flow

RLA Rated Load Amps.
LRA Locked Rotor Amps
FLA Full Load Amps

Note :
Voltage imbalance not to exceed ± 2 % of the rated voltage

ELECTRICAL DATA

Power Supply : 460V/3PH/60Hz

Model ACMR	Unit Characterisitc			Compressor			Condenser Fan Motor		
	MFA	MCA	ICF	QTY	RLA	LRA	QTY	FLA	LRA
6010	50	28	132	1	20	125	2	1.3	5.2
6014	80	44	188	1	30	173	2	3.1	11.8
6018	100	49	240	1	34	225	2	3.1	11.8
6022	125	69	298	1	47	272	2	5	21
6028	125	83	234	2	30	173	3	5	21
6035	160	92	290	2	34	225	3	5	21
6045	160	131	264	4	26	150	4	5	21
6055	200	148	299	4	30	173	4	5	21
6060	250	152	402	2	61	310	4	3.8	20
6065	315	179	500	1 + 1	82 + 61	408 + 310	4	3.8	20
6075	315	200	521	2	82	408	4	3.8	20
6085	315	221	471	3	61	310	6	3.8	20
6095	400	247	569	1 + 2	82 + 61	408 + 310	6	3.8	20
6105	400	268	590	2 + 1	82 + 61	408 + 310	6	3.8	20
6110	400	289	611	3	82	408	6	3.8	20
6120	400	290	540	4	61	310	8	3.8	20
6130	500	337	659	2 + 2	82 + 61	408 + 310	8	3.8	20
6140	500	379	701	4	82	408	8	3.8	20
6160	500	399	649	4 + 2	61 + 47	310 + 272	12	3.8	20
6175	500	427	677	6	61	310	12	3.8	20
6190	630	474	796	2 + 4	82 + 61	408 + 310	12	3.8	20
6200	630	516	838	4 + 2	82 + 61	408 + 310	12	3.8	20
6215	800	558	880	6	82	408	12	3.8	20
6230	800	564	814	8	61	310	16	3.8	20
6245	800	611	933	2 + 6	82 + 61	408 + 310	16	3.8	20
6260	800	653	975	4 + 4	82 + 61	408 + 310	16	3.8	20
6270	800	695	1017	6 + 2	82 + 61	408 + 310	16	3.8	20
6280	1000	737	1059	8	82	408	16	3.8	20

Table 21

Legend

MFA Maximum Fuse Amps (for fuse sizing), complies with NEC Article 440-22 & 430-52.

MCA Minimum Circuit Amps.(for wire sizing), complies with NEC article 440-33.

ICF Maximum Instantaneous Current Flow

RLA Rated Load Amps.
LRA Locked Rotor Amps
FLA Full Load Amps

Note :
Voltage imbalance not to exceed ± 2 % of the rated voltage

ELECTRICAL DATA

Power Supply : 220V/3PH/60Hz

Model ACMR	Unit Characterisitc			Compressor			Condenser Fan Motor		
	MFA	MCA	ICF	QTY	RLA	LRA	QTY	FLA	LRA
6010	100	51	249	1	37	239	2	2.5	7.5
6014	160	88	362	1	62	340	2	5.4	16.7
6018	200	115	527	1	83	505	2	5.4	16.7
6022	250	137	644	1	95	605	2	9	29.7
6028	250	167	450	2	62	340	3	9	29.7
6035	315	214	636	2	83	505	3	9	29.7
6045	400	278	528	4	57	300	4	9	29.7
6055	400	300	583	4	62	340	4	9	29.7
6060	500	302	773	2	122	599	4	6.8	32
6065	Please consult SKM								
6075									
6085	630	437	909	3	122	599	6	6.8	32
6095	Please consult SKM								
6105									
6110									
6120	800	573	1045	4	122	599	8	6.8	32
6130	Please consult SKM								
6140									
6160	1000	790	1262	4 + 2	122 + 95	599 + 605	12	6.8	32
6175	1000	844	1316	6	122	599	12	6.8	32
6190	Please consult SKM								
6200									
6215									
6230	1250	1115	1587	8	122	599	16	6.8	32
6245	Please consult SKM								
6260									
6270									
6280									

Table 22

Legend

MFA Maximum Fuse Amps (for fuse sizing), complies with NEC Article 440-22 & 430-52.

MCA Minimum Circuit Amps.(for wire sizing), complies with NEC article 440-33.

ICF Maximum Instantaneous Current Flow

RLA Rated Load Amps.

LRA Locked Rotor Amps

FLA Full Load Amps

Note :
Voltage imbalance not to exceed ± 2 % of the rated voltage

Typical Wiring Diagram

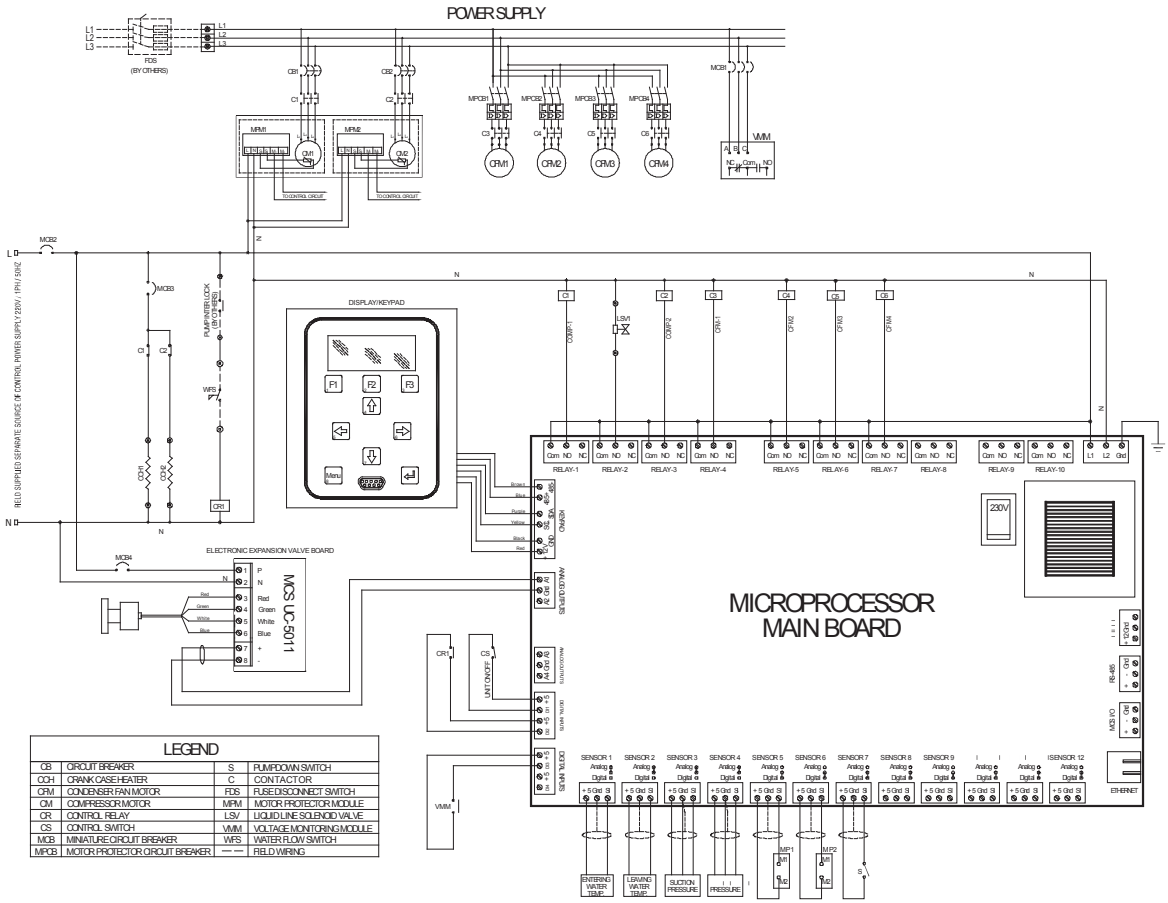

Power Entry Connections

All ACMR units are with single point power entry.

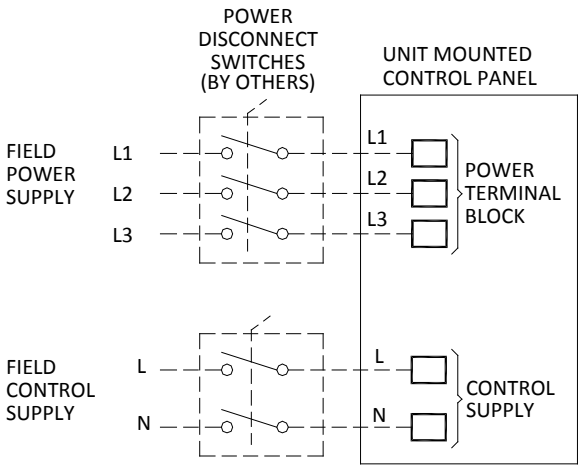

Standard Power Connection

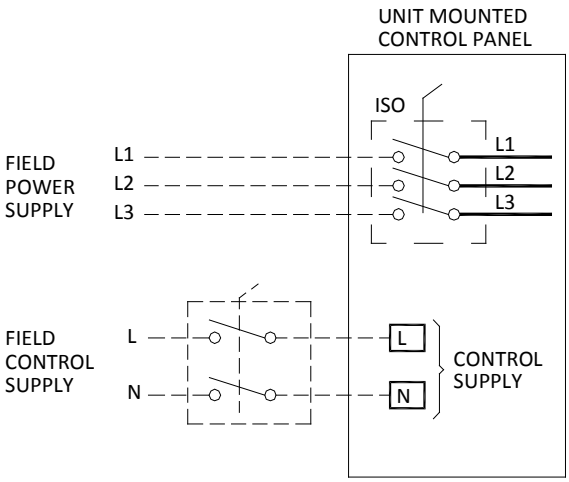

Power Connection with Optional Isolator

Dimensional Data

ACMR Models - 5008, 5012 & 6010, 6014

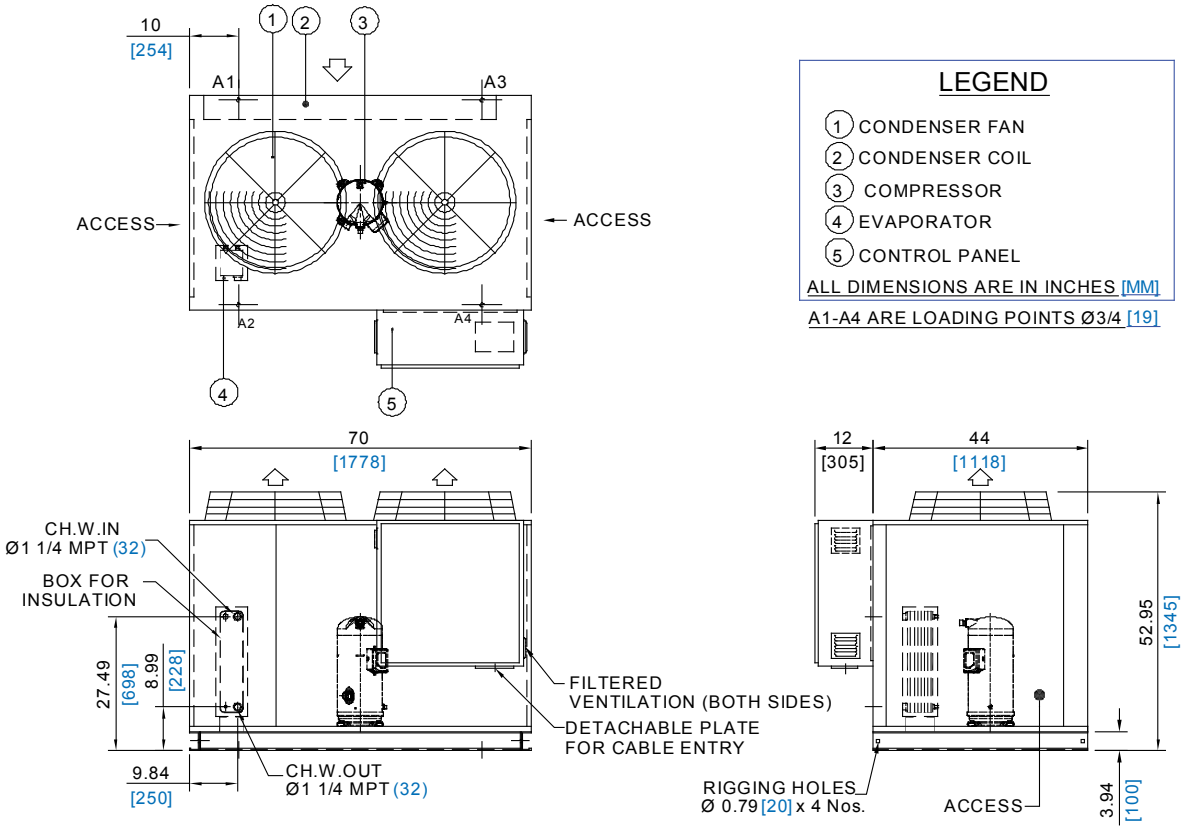

ACMR Models - 5016, 5020 & 6018, 6022

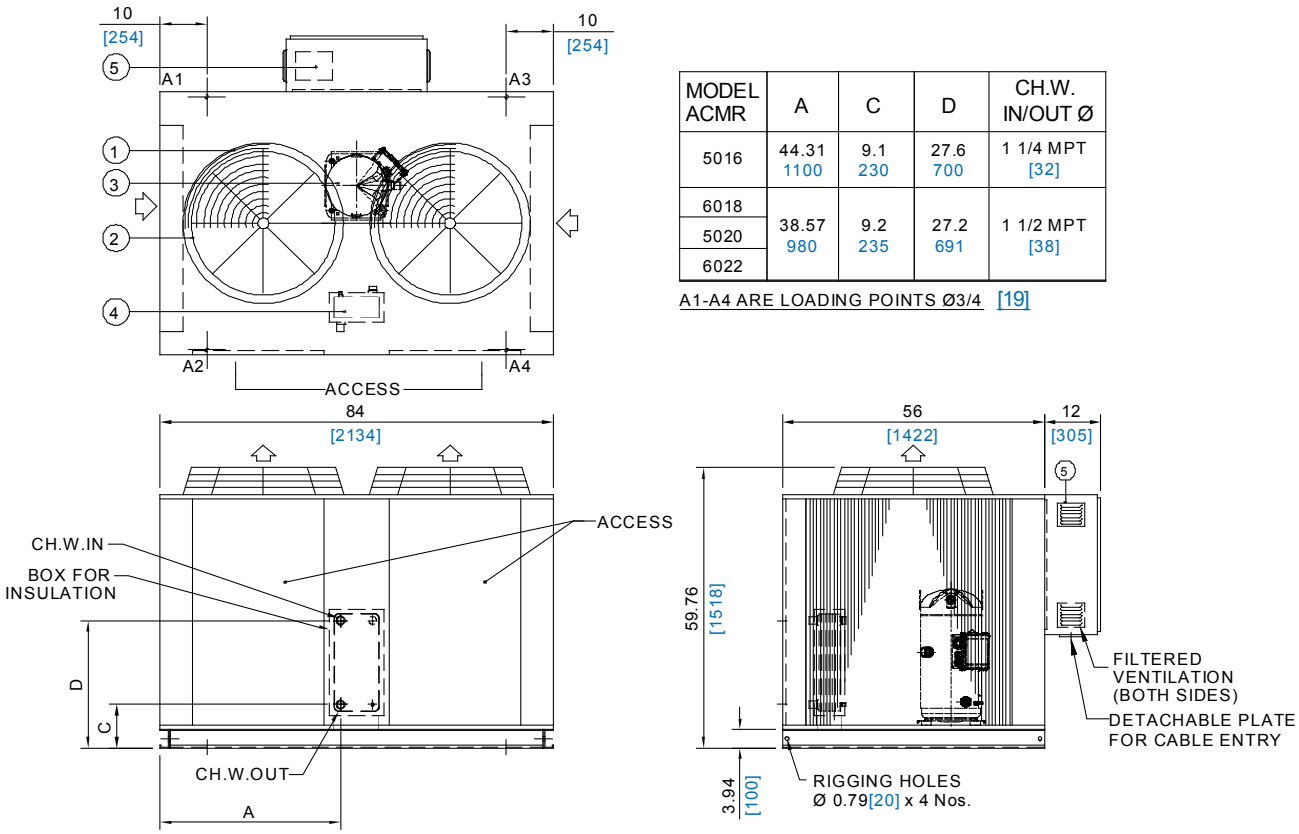

MODEL ACMR	A	C	D	CH.W. IN/OUT Ø
5016	44.31 1100	9.1 230	27.6 700	1 1/4 MPT [32]
6018 5020 6022	38.57 980	9.2 235	27.2 691	1 1/2 MPT [38]

A1-A4 ARE LOADING POINTS Ø3/4 [19]

Dimensional Data

ACMR Models - 5024, 5030 & 6028, 6035

MODEL ACMR	H	W	CH.W. IN/OUT Ø
5024	62.52 1588	76 1930	1 1/2 MPT [38]
6028			
5030	74.53 1893	80 2032	
6035			2 1/2 MPT [63]

A1-A4 ARE LOADING POINTS Ø3/4 [19]

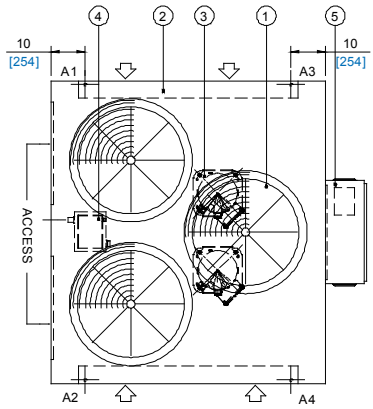

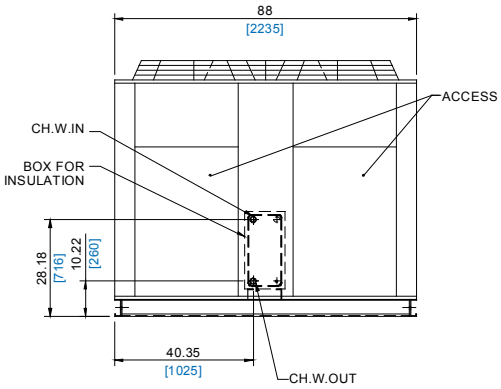

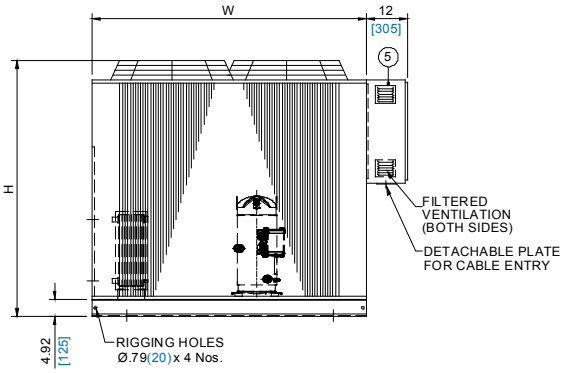

ACMR Models - 5040, 5045 & 6045, 6055

MODEL ACMR	H
5040	77.76 1975
6045	
5045	85.75 2178
6055	

LEGEND

1. CONDENSER FAN
2. CONDENSER COIL
3. COMPRESSOR
4. EVAPORATOR
5. CONTROL PANEL

ALL DIMENSIONS ARE IN INCHES [MM]

A1-A4 ARE LOADING POINTS Ø3/4 [19]

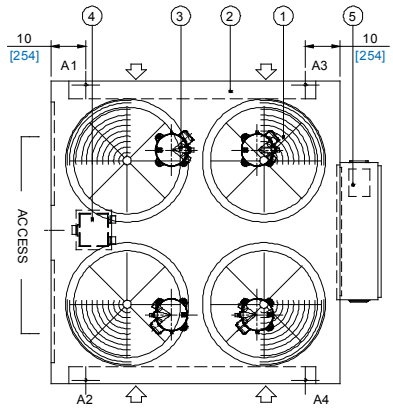

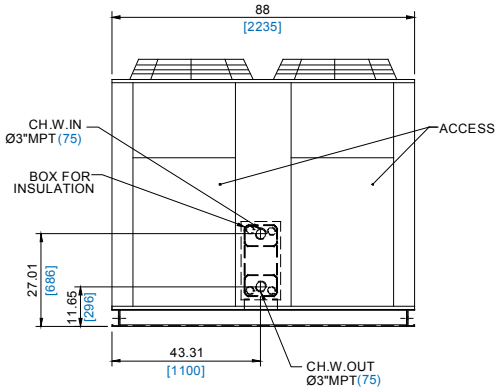

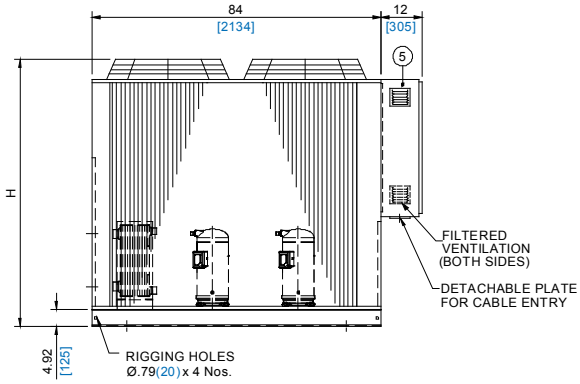

Dimensional Data

ACMR Model - 5050, 5055, 5060 & 6060, 6065, 6075

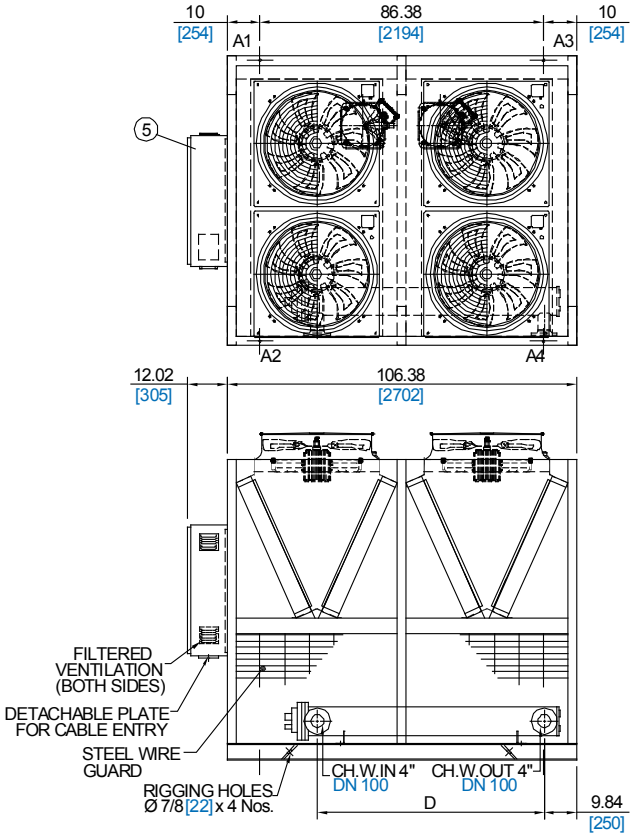

MODEL ACMR	D
5050	69.1 1755
5055	
5060	84.8 2155
6060	
6065	
6075	108.5 2755

LEGEND
1. CONDENSER FAN
2. CONDENSER COIL
3. COMPRESSOR
4. EVAPORATOR
5. CONTROL PANEL

ALL DIMENSIONS ARE IN INCHES [MM]
A1-A4 ARE LOADING POINTS Ø3/4 [19]

NOTE:
FOR ACMR MODELS 5060,6060,6065 & 6075 LENGTH & LOAD DISTRIBUTION WILL BE DIFFERENT.CONSULT SKM FOR MORE DETAILS.

ACMR Models - 5070~5090 & 6085~6110

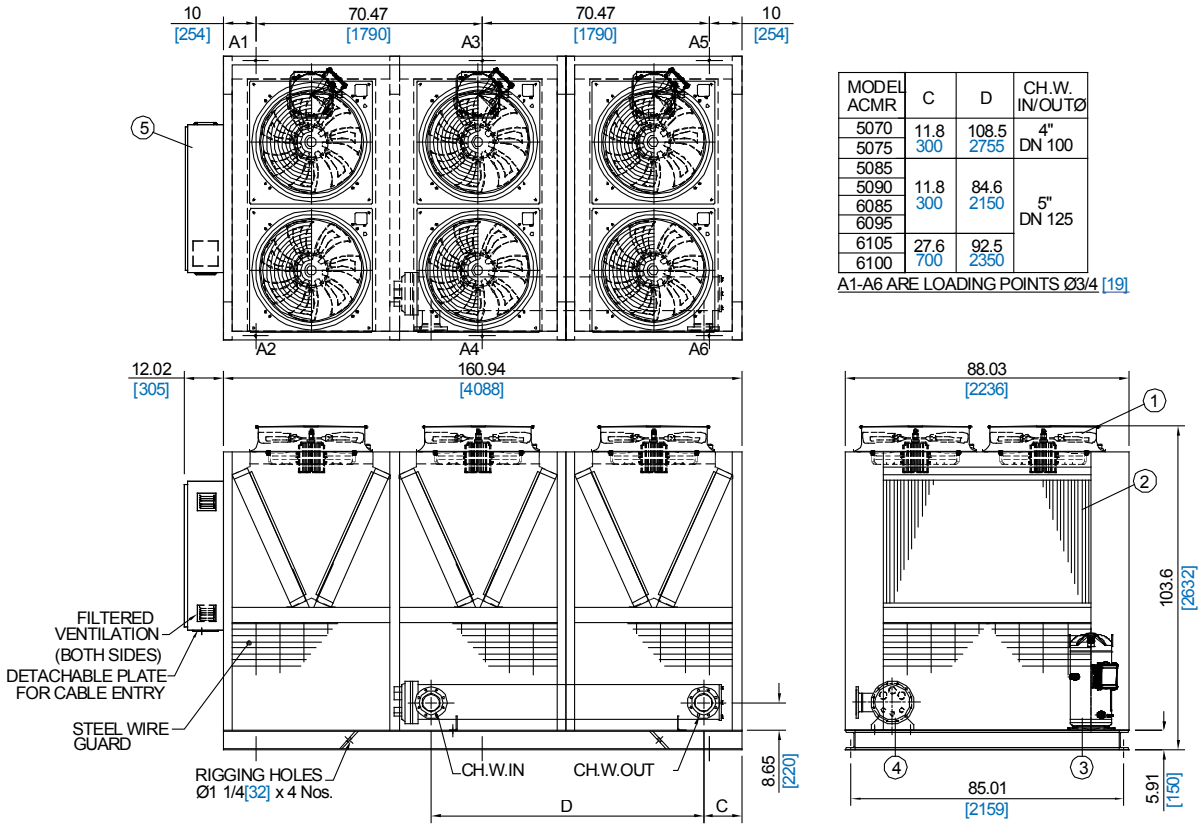

MODEL ACMR	C	D	CH.W. IN/OUTØ
5070	11.8 300	108.5 2755	4" DN 100
5075			
5085	11.8 300	84.6 2150	5" DN 125
5090			
6085			
6095			
6105	27.6 700	92.5 2350	
6100			

A1-A6 ARE LOADING POINTS Ø3/4 [19]

Dimensional Data

ACMR Models - 5095, 5110, 5120 & 6120, 6130, 6140

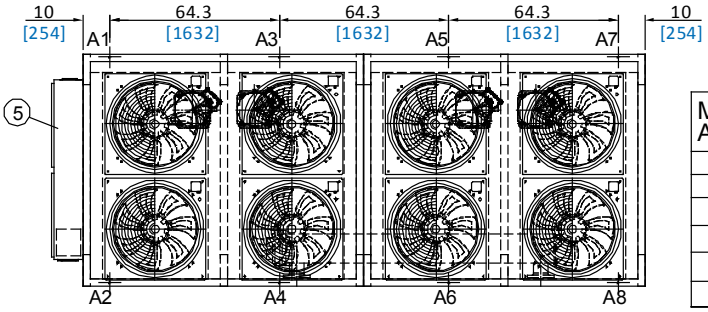

MODEL ACMR	D
5095	84.6 2150
5110	
5120	92.5 2350
6120	
6130	
6140	

LEGEND

1. CONDENSER FAN
2. CONDENSER COIL
3. COMPRESSOR
4. EVAPORATOR
5. CONTROL PANEL

ALL DIMENSIONS ARE IN INCHES [MM]

A1-A8ARE LOADING POINTS Ø3/4 [19]

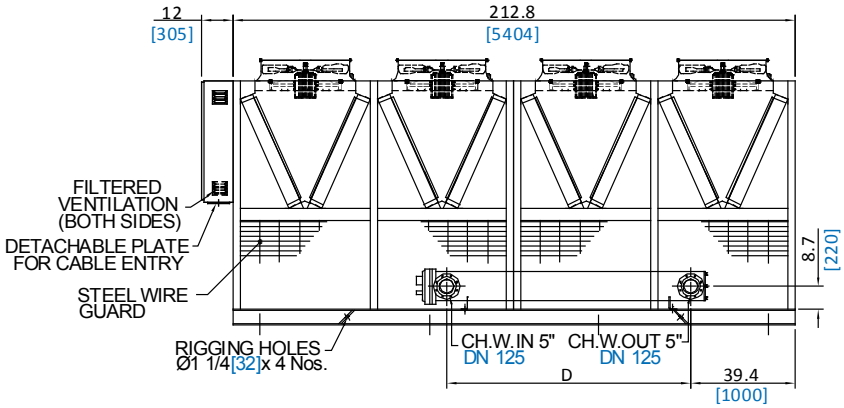

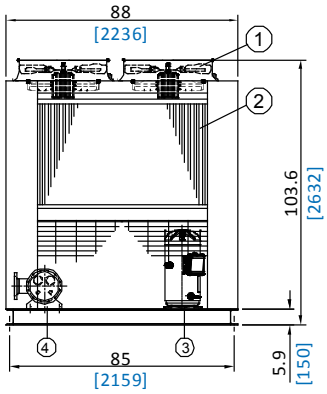

ACMR Models - 5130~5180 & 6160~6215

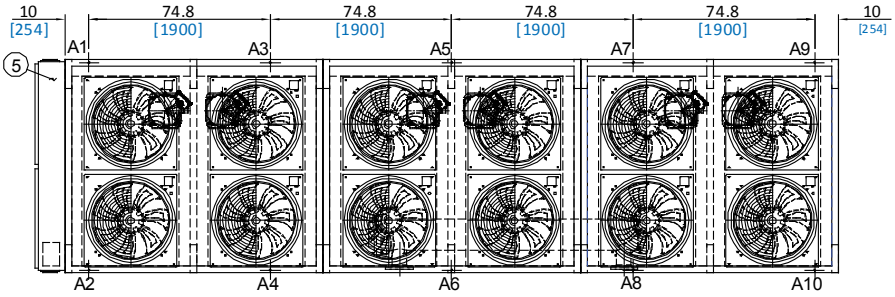

MODEL ACMR	C	D	CH.W. IN/OUTØ
5130	78.7 2000	108.3 2750	5" DN 125
5140			
6160			
5155	88.6 2250	84.6 2150	6" DN 150
5165			
6175			
5180	88.6 2250	92.5 2350	
6190			
6200			
6215	78.7 2000	108.3 2750	

A1-A10 ARE LOADING POINTS Ø3/4 [19]

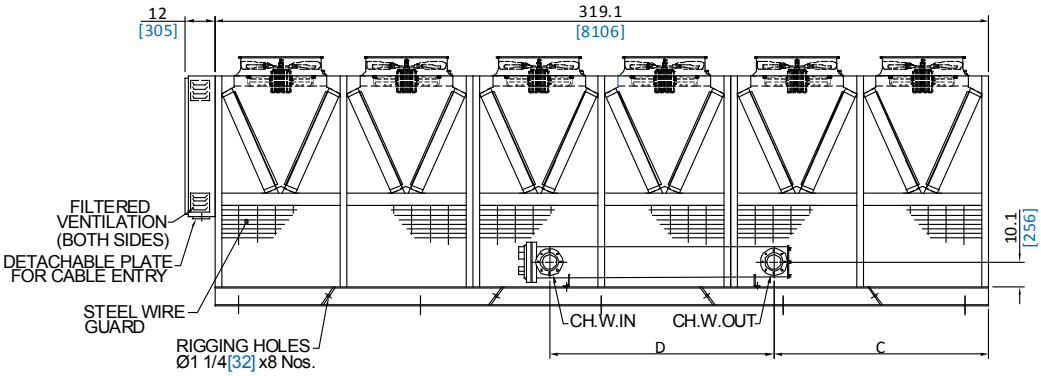

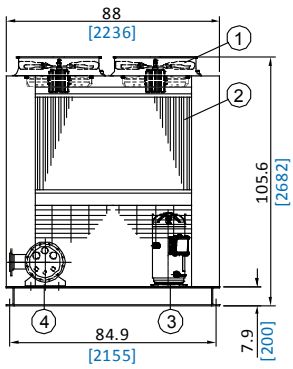

Dimensional Data

ACMR Model - 5190~5240 & 6230 ~ 6280

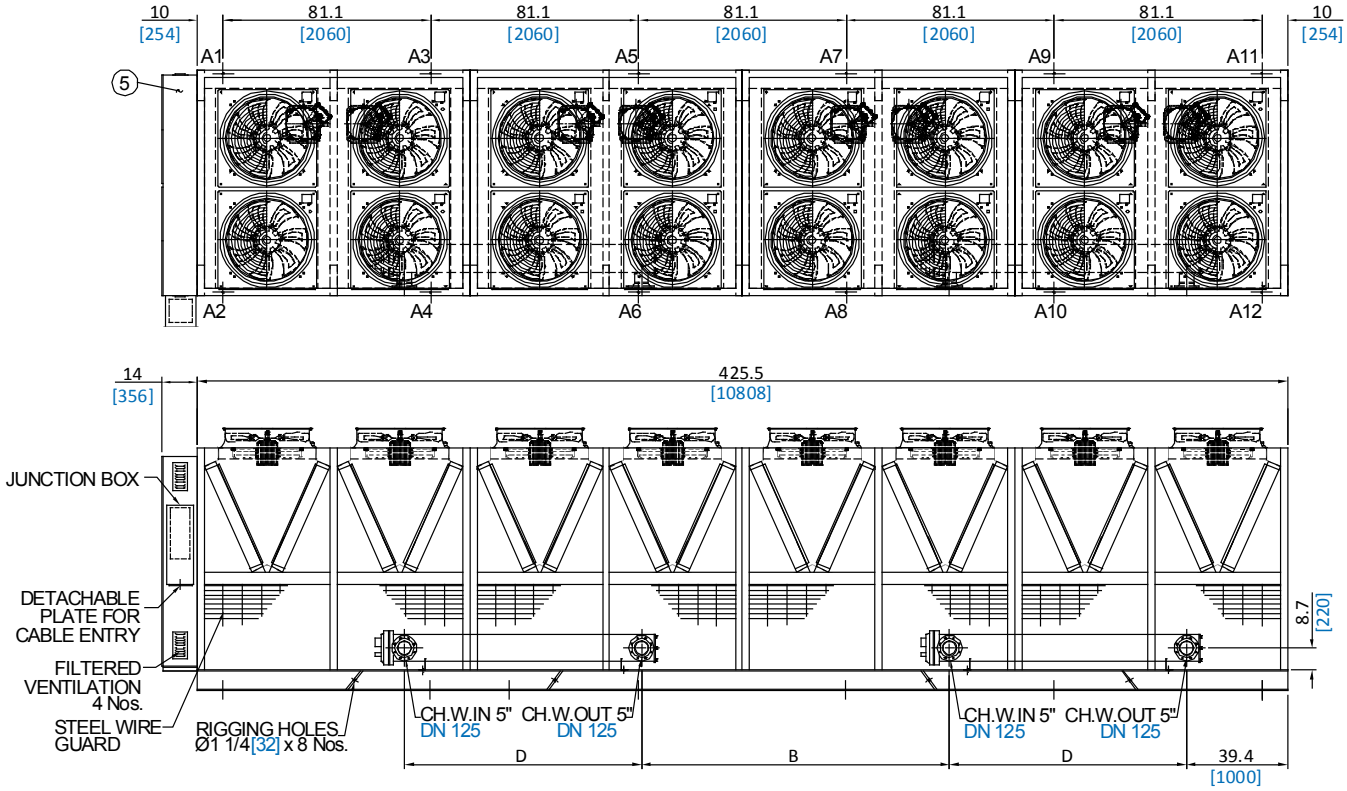

LEGEND

1. CONDENSER FAN
2. CONDENSER COIL
3. COMPRESSOR
4. EVAPORATOR
5. CONTROL PANEL

ALL DIMENSIONS ARE IN INCHES[MM]

A1-A12 ARE LOADING POINTS Ø3/4 [19]

MODEL ACMR	B	D
5190	128.1 3254	84.6 2150
5205		
5215		
6230		
5230	120.3 3054	92.5 2350
5240		
6245		
6260		
6270		
6280		

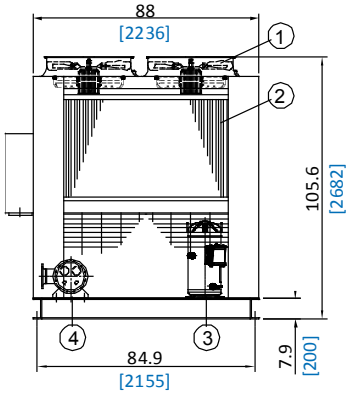

SIDE VIEW

LOAD DISTRIBUTION ON MOUNTING POINTS

ACMR Models	Units	Mounting Loads												Operating Weight
		A1	A2	A3	A4	A5	A6	A7	A8	A9	A10	A11	A12	
5008	lbs	239	294	224	392	-	-	-	-	-	-	-	-	1149
	kg	108	133	102	178	-	-	-	-	-	-	-	-	**521**
5012	lbs	265	306	242	397	-	-	-	-	-	-	-	-	1210
	kg	120	139	110	180	-	-	-	-	-	-	-	-	**549**
5016	lbs	466	314	466	314	-	-	-	-	-	-	-	-	1560
	kg	211	142	211	142	-	-	-	-	-	-	-	-	**707**
5020	lbs	501	354	501	354	-	-	-	-	-	-	-	-	1710
	kg	227	161	227	161	-	-	-	-	-	-	-	-	**776**
5024	lbs	505	505	635	635	-	-	-	-	-	-	-	-	2280
	kg	229	229	288	288	-	-	-	-	-	-	-	-	**1034**
5030	lbs	648	647	783	783	-	-	-	-	-	-	-	-	2861
	kg	294	293	355	355	-	-	-	-	-	-	-	-	**1298**
5040	lbs	704	702	884	884	-	-	-	-	-	-	-	-	3174
	kg	319	318	401	401	-	-	-	-	-	-	-	-	**1439**
5045	lbs	739	737	913	913	-	-	-	-	-	-	-	-	3302
	kg	335	334	414	414	-	-	-	-	-	-	-	-	**1498**
5050	lbs	1359	1271	1184	1154	-	-	-	-	-	-	-	-	4968
	kg	616	576	537	523	-	-	-	-	-	-	-	-	**2253**
5055	lbs	1412	1321	1210	1173	-	-	-	-	-	-	-	-	5116
	kg	640	599	549	532	-	-	-	-	-	-	-	-	**2320**
5060	lbs	810	737	1494	1085	696	846	-	-	-	-	-	-	5668
	kg	367	334	678	492	316	384	-	-	-	-	-	-	**2571**
5070	lbs	1221	1092	1620	1333	980	937	-	-	-	-	-	-	7183
	kg	554	495	735	605	444	425	-	-	-	-	-	-	**3258**
5075	lbs	1276	1135	1640	1348	982	939	-	-	-	-	-	-	7320
	kg	579	515	744	611	445	426	-	-	-	-	-	-	**3320**
5085	lbs	1267	1068	1745	1558	1001	1007	-	-	-	-	-	-	7646
	kg	575	484	791	707	454	457	-	-	-	-	-	-	**3468**
5090	lbs	1269	1070	1764	1573	1056	1050	-	-	-	-	-	-	7782
	kg	576	485	800	713	479	476	-	-	-	-	-	-	**3529**
5095	lbs	1373	1238	1339	1223	1353	1294	946	920	-	-	-	-	9686
	kg	623	561	607	555	614	587	429	417	-	-	-	-	**4393**
5110	lbs	1426	1284	1427	1298	1360	1302	950	924	-	-	-	-	9971
	kg	647	582	647	589	617	590	431	419	-	-	-	-	**4522**
5120	lbs	1430	1288	1446	1362	1445	1356	1004	980	-	-	-	-	10311
	kg	649	584	656	618	655	615	455	444	-	-	-	-	**4676**
5130	lbs	1648	1476	1543	1365	1658	1526	1560	1620	1167	1013	-	-	14576
	kg	747	669	700	619	752	692	707	735	529	459	-	-	**6610**
5140	lbs	1648	1477	1544	1366	1659	1527	1596	1633	1194	1022	-	-	14666
	kg	747	670	700	620	752	693	724	741	541	463	-	-	**6651**
5155	lbs	1709	1530	1614	1377	1717	1753	1616	1672	1197	1026	-	-	15211
	kg	775	694	732	624	779	795	733	758	543	465	-	-	**6898**
5165	lbs	1712	1533	1637	1399	1817	1835	1638	1694	1200	1029	-	-	15494
	kg	776	695	742	634	824	832	743	768	544	467	-	-	**7027**
5180	lbs	1715	1536	1652	1458	1816	1817	1726	1791	1260	1082	-	-	15853
	kg	778	697	749	661	824	824	783	812	571	491	-	-	**7190**
5190	lbs	1950	1760	1675	1658	1785	1683	1744	1475	1682	1693	1342	1291	19738
	kg	884	798	760	752	810	763	791	669	763	768	609	585	**8951**
5205	lbs	2016	1818	1749	1723	1788	1685	1747	1477	1685	1695	1345	1294	20022
	kg	914	824	793	781	811	764	792	670	764	769	610	587	**9080**
5215	lbs	2018	1820	1780	1752	1888	1770	1758	1489	1687	1698	1347	1297	20304
	kg	915	825	807	795	856	803	797	675	765	770	611	588	**9208**
5230	lbs	2024	1837	1788	1782	1901	1785	1867	1613	1717	1720	1352	1312	20698
	kg	918	833	811	808	862	810	847	732	779	780	613	595	**9387**
5240	lbs	2026	1839	1791	1785	1903	1787	1869	1616	1792	1785	1418	1369	20980
	kg	919	834	812	810	863	810	848	733	813	810	643	621	**9515**

Table 23

LOAD DISTRIBUTION ON MOUNTING POINTS

ACMR Models	Units	Mounting Loads												Operating Weight
		A1	A2	A3	A4	A5	A6	A7	A8	A9	A10	A11	A12	
6010	lbs	245	301	224	392	-	-	-	-	-	-	-	-	1162
	kg	111	137	102	178	-	-	-	-	-	-	-	-	**527**
6014	lbs	292	320	262	403	-	-	-	-	-	-	-	-	1277
	kg	132	145	119	183	-	-	-	-	-	-	-	-	**579**
6018	lbs	484	343	484	343	-	-	-	-	-	-	-	-	1654
	kg	220	156	220	156	-	-	-	-	-	-	-	-	**750**
6022	lbs	524	382	524	382	-	-	-	-	-	-	-	-	1812
	kg	238	173	238	173	-	-	-	-	-	-	-	-	**822**
6028	lbs	525	524	642	642	-	-	-	-	-	-	-	-	2333
	kg	238	238	291	291	-	-	-	-	-	-	-	-	**1058**
6035	lbs	649	649	785	785	-	-	-	-	-	-	-	-	2868
	kg	294	294	356	356	-	-	-	-	-	-	-	-	**1301**
6045	lbs	712	710	885	885	-	-	-	-	-	-	-	-	3192
	kg	323	322	401	401	-	-	-	-	-	-	-	-	**1448**
6055	lbs	749	746	915	914	-	-	-	-	-	-	-	-	3324
	kg	340	338	415	415	-	-	-	-	-	-	-	-	**1507**
6060	lbs	799	733	1441	1065	687	837	-	-	-	-	-	-	5562
	kg	362	332	654	483	312	380	-	-	-	-	-	-	**2522**
6065	lbs	812	743	1502	1113	691	840	-	-	-	-	-	-	5701
	kg	368	337	681	505	313	381	-	-	-	-	-	-	**2585**
6075	lbs	837	848	1526	1070	730	908	-	-	-	-	-	-	5919
	kg	380	385	692	485	331	412	-	-	-	-	-	-	**2684**
6085	lbs	1243	1059	1714	1553	1030	1039	-	-	-	-	-	-	7638
	kg	564	480	777	704	467	471	-	-	-	-	-	-	**3464**
6095	lbs	1296	1100	1732	1567	1032	1041	-	-	-	-	-	-	7768
	kg	588	499	785	711	468	472	-	-	-	-	-	-	**3523**
6105	lbs	1322	1218	1798	1605	1023	988	-	-	-	-	-	-	7954
	kg	600	552	815	728	464	448	-	-	-	-	-	-	**3607**
6110	lbs	1323	1219	1816	1618	1076	1028	-	-	-	-	-	-	8080
	kg	600	553	824	734	488	466	-	-	-	-	-	-	**3664**
6120	lbs	1406	1273	1402	1336	1401	1331	980	965	-	-	-	-	10094
	kg	638	577	636	606	635	604	444	438	-	-	-	-	**4578**
6130	lbs	1455	1316	1487	1406	1408	1338	984	969	-	-	-	-	10363
	kg	660	597	674	638	639	607	446	439	-	-	-	-	**4700**
6140	lbs	1459	1320	1494	1414	1493	1409	1034	1012	-	-	-	-	10635
	kg	662	599	678	641	677	639	469	459	-	-	-	-	**4823**
6160	lbs	1631	1246	1711	1976	1659	1315	1621	1688	1204	1054	-	-	15105
	kg	740	565	776	896	752	596	735	766	546	478	-	-	**6850**
6175	lbs	1685	1518	1594	1374	1768	1809	1674	1737	1231	1063	-	-	15453
	kg	764	688	723	623	802	820	759	788	558	482	-	-	**7008**
6190	lbs	1743	1568	1684	1497	1767	1791	1683	1766	1234	1066	-	-	15799
	kg	790	711	764	679	801	812	763	801	560	483	-	-	**7165**
6200	lbs	1746	1571	1705	1518	1862	1869	1705	1787	1237	1070	-	-	16070
	kg	792	712	773	688	844	848	773	810	561	485	-	-	**7288**
6215	lbs	1750	1574	1721	1577	1852	1810	1810	1978	1295	1120	-	-	16487
	kg	794	714	780	715	840	821	821	897	587	508	-	-	**7477**
6230	lbs	1991	1805	1738	1728	1848	1752	1807	1544	1745	1763	1383	1336	20440
	kg	903	819	788	784	838	795	820	700	791	800	627	606	**9270**
6245	lbs	2056	1873	1815	1817	1851	1758	1817	1587	1747	1758	1389	1352	20820
	kg	932	849	823	824	839	797	824	720	792	797	630	613	**9442**
6260	lbs	2059	1876	1844	1844	1948	1838	1829	1598	1750	1761	1391	1354	21092
	kg	934	851	836	836	883	834	829	725	794	799	631	614	**9566**
6270	lbs	2062	1878	1847	1847	1958	1849	1924	1677	1779	1789	1394	1357	21361
	kg	935	852	838	838	888	839	873	761	807	811	632	615	**9688**
6280	lbs	2064	1881	1849	1850	1961	1851	1927	1680	1850	1850	1456	1411	21630
	kg	936	853	839	839	889	839	874	762	839	839	660	640	**9810**

Table 24

Installation & Application Data

Location/Space Requirements

To enhance system performance and operating economy, certain precautions should be followed before installation.

1. There should be no obstruction on the air discharge
2. Unit must not be installed in a pit or near a parapet wall that is taller than the unit height.
3. Orient the unit so that prevailing winds blow parallel to the unit length. I f it is not practical to orient in this manner, a wind deflecting shield should be considered.
4. Provide adequate clearance on all sides of the unit for service accesses and avoid coil starvation.

Foundation

Provide a level and rigid concrete foundation or a steel platform that is strong enough to carry the operating weight of the unit. SKM Air Conditioning is not liable for any damages and problems in the equipment caused by erroneous design in the foundation.

Recommended Clearances

It is a necessity that the units are installed with adequate free space around them to ensure proper circulation of air that is rejected by the condensers and to provide adequate space for unit access for servicing and maintenance. There is a possibility of recycling of air if the rejected air from condenser encounters any obstacles leading to an increase in the ambient air temperature surrounding the units.

Air distribution across the entire heat exchange area will be impaired if the air outlet is obstructed. These conditions lead to a reduction in the heat exchange capacity of the coils causing an increase in discharge pressure of the compressors. This leads to a loss of capacity & increase in compressor power input.

Units should not be completely shrouded with higher uninterrupted wind shield in order to prevent reversing of airflow. In case, such a configuration cannot be avoided , a properly designed exhaust duct or hood that does not influence any additional pressure on the fans and which is of the same height as surrounding shield to be installed. For installation involving more than 3 chillers, consult SKM for acceptable clearance.

SINGLE UNIT INSTALLATION

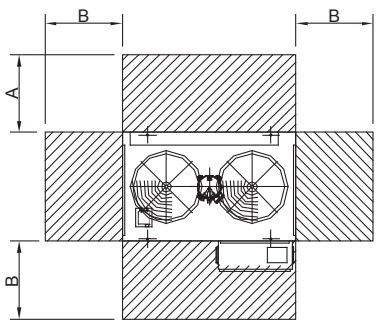

ACMR-5008,5012
ACMR-6010,6014

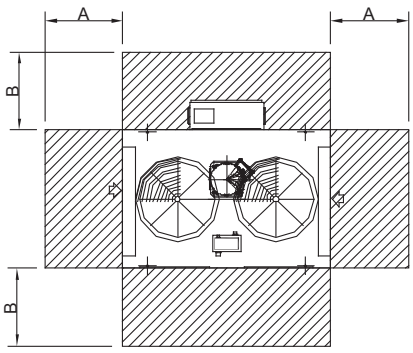

ACMR-5016,5020
ACMR-6018,6022

Recommended Clearances

SINGLE UNIT INSTALLATION

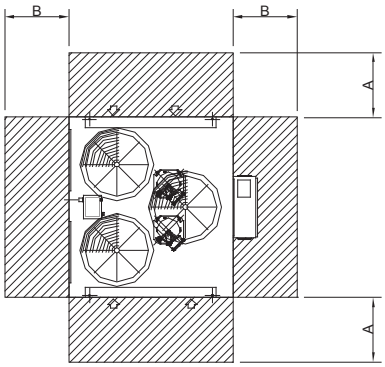

ACMR-5024,5030
ACMR-6028,6035

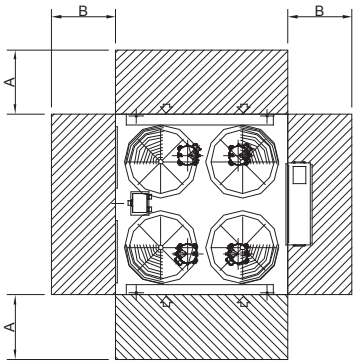

ACMR-5040,5045
ACMR-6045,6055

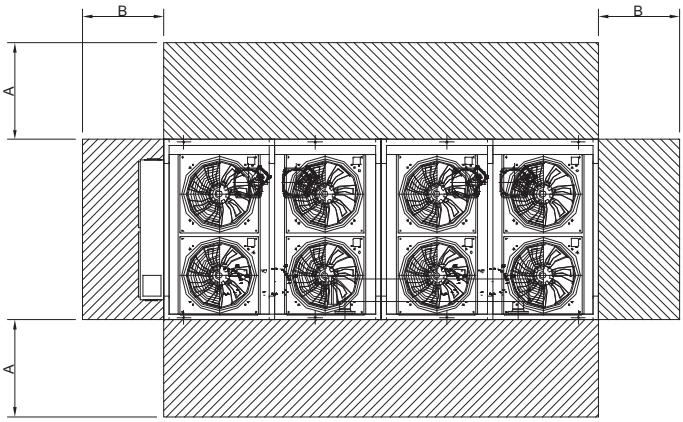

ACMR-5050~5240
ACMR-6060~6280

Recommended Clearances

MULTIPLE UNIT INSTALLATION

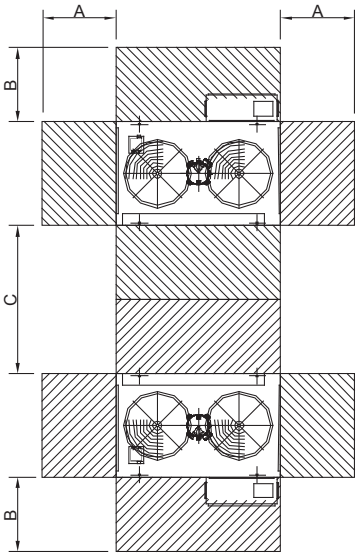

ACMR-5008,5012
ACMR-6010,6014

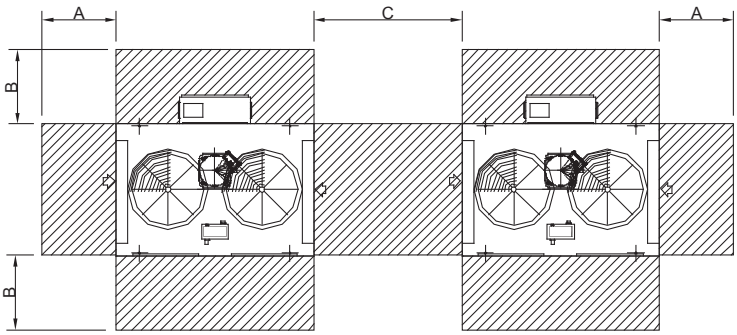

ACMR-5016,5020
ACMR-6018,6022

Recommended Clearances

MULTIPLE UNIT INSTALLATION

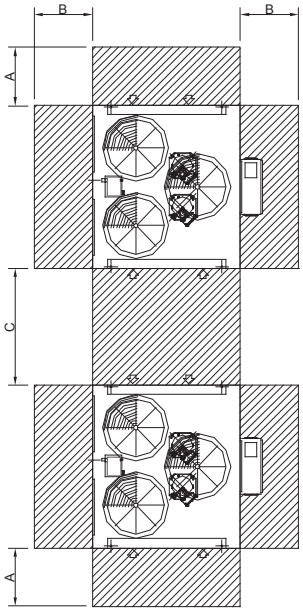

ACMR-5024,5030
ACMR-6028,6035

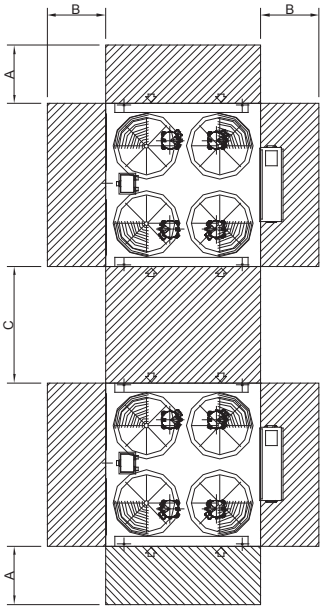

ACMR-5040,5045
ACMR-6045,6055

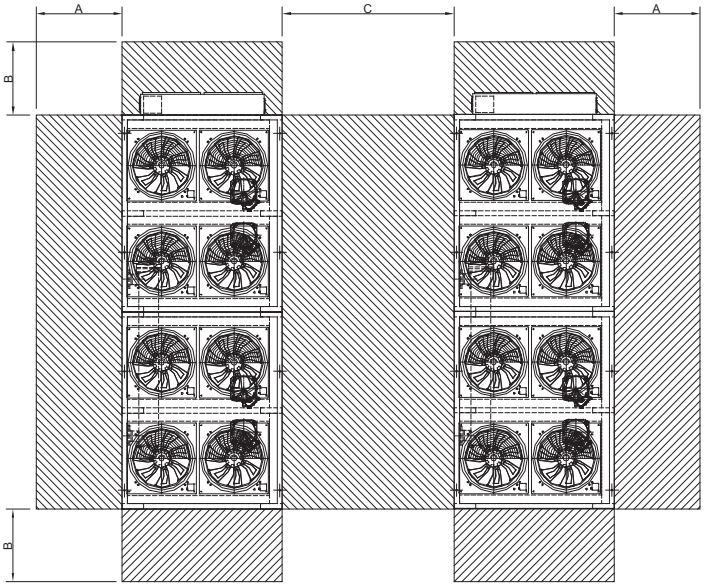

ACMR-5050~5240
ACMR-6060~6280

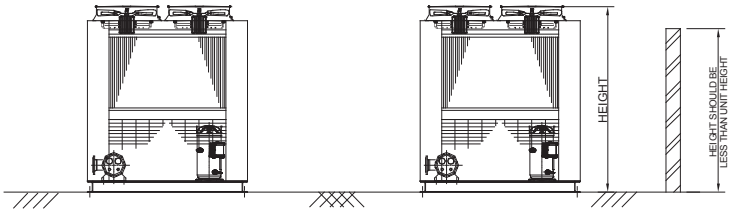

ACMR Models		A	B	C
5008	6010	40	66	60
5012	6014			
5016	6018	48	50	72
5020	6022			
5024	6028	48	66	72
5030	6035	60	70	90
5040	6045	64	78	96
5045	6055	72	78	108
5050	6060	84	60	90
5055	6065			
5060	6075			
5070	6085			
5075	6095			
5085	6105			
5090	6110			
5095	6120			
5110	6130			
5120	6140			
5130	6160			
5140	6175			
5155	6190			
5165	6200			
5180	6215			
5190	6230			
5205	6245			
5215	6260			
5230	6270			
5240	6280			

Table 25

Water Piping Practices

SKM suggests abiding by the local authorities' chilled water piping recommendations and practices as they can provide the installer the building and safety codes required for the installation.

Water piping should be designed to have a minimum number of bends and horizontal piping levels. Below are the following components it should have.

1. Temperature and pressure gauges in entering and leaving chiller water piping for unit servicing and commissioning. Pressure gauges must be installed on the same level.

2. Vibration eliminators in entering and leaving chilled water piping to lessen the sound and vibration transmitted to the building.

3. Pipe strainer in the evaporator entering piping to protect the evaporator from water debris and maintain chiller efficiency. For BPHE, it is a must to have a strainer with a size of 16-20 mesh (number of openings per inch).

4. Water flow switch in the leaving chilled water piping, wired to the terminals provided in the control panel, to make sure that it has sufficient flow of water in the evaporator. This will prevent the evaporator from freezing up when the water flow is interrupted and avoid compressor slugging on start-up.

5. To isolate the unit from the piping system when servicing or during maintenance, install a shut off valve on the entering and leaving chilled water piping.

6. Expansion Tank provides additional space in the chilled water piping system as temperature rises and furthermore it maintains a positive pressure within the working limitations of the system.

7. Air vents at high points in the chilled water system to bleed air from the system.

8. Vapor barrier on the outside of the insulation to avoid condensation in the cold surface of the pipe that may cause damage on the building structure. A thorough leak test should be made before insulating the pipe.

Flush all chilled water piping before making the final connection to the unit. SKM recommends hiring services of water treatment specialist to determine the type of necessary treatment. Improper or untreated chilled water leads to scaling, erosion or algae that can cause inefficient operations and evaporator damage. SKM will not be liable for damages caused by improper or untreated chilled water.

Run the pumps 2 to 3 minutes before starting the chiller to ensure no freezing occurs that may damage the evaporator.

Unit Sizing

It is strongly recommended to size the chiller for the present load. For future expansion, it is recommended to install another chiller to meet the additional load demand.

Over sizing of chillers by more than 10% at design conditions must be avoided. Over sizing causes energy inefficiency (more power consumption), erratic system operation and shortened compressor life due to excessive cycling of compressors.

TYPICAL PIPING FOR BPHE EVAPORATOR

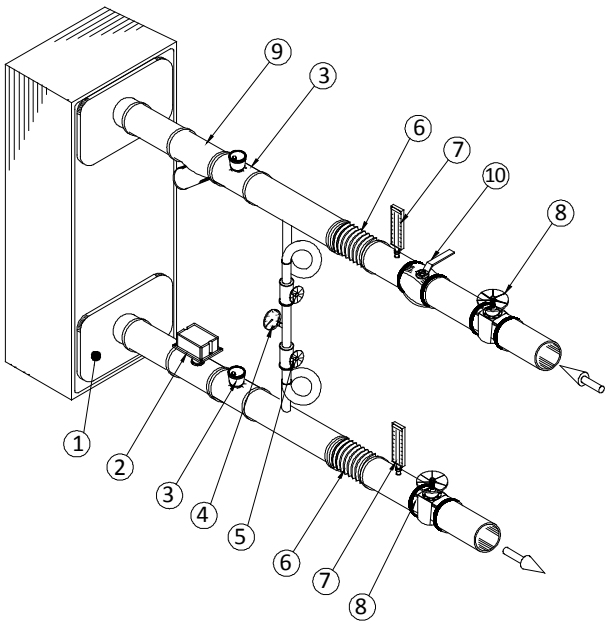

1. HEAT EXCHANGER
2. WATER FLOW SWITCH
3. VENT
4. PRESSURE GAGE
5. SHUT OFF VALVES
6. VIBRATION ELIMINATOR
7. THERMOMETERS
8. GATE VALVE
9. STRAINER
10. BALANCING VALVE

TYPICAL PIPING FOR SHELL & TUBE EVAPORATOR

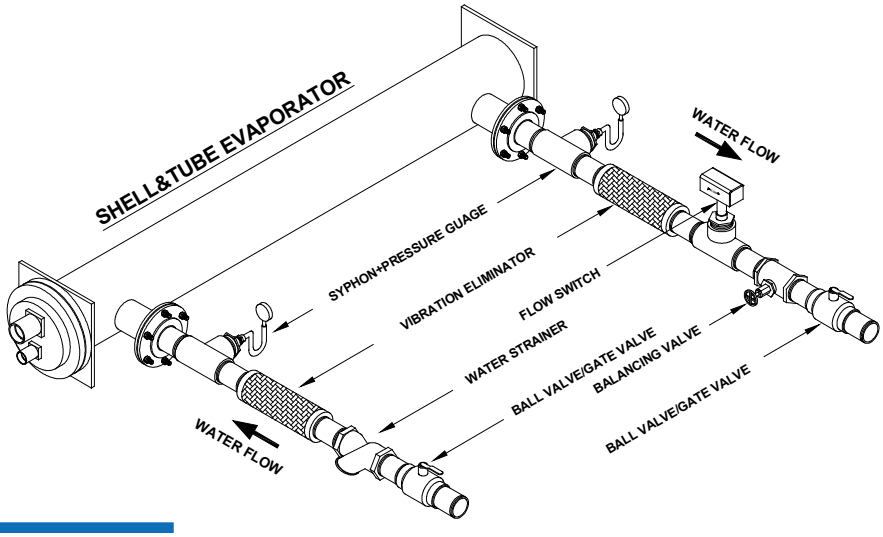

Vibration Isolation

It is recommended to install under the base of the unit a vibration isolation of rubber-in-shear or spring type for further reduction of sound and vibration transmission to building structures . Vibration isolators must be correctly designed for each mounting loads of the unit. Refer to unit certified drawing for operating weight at each mounting points.

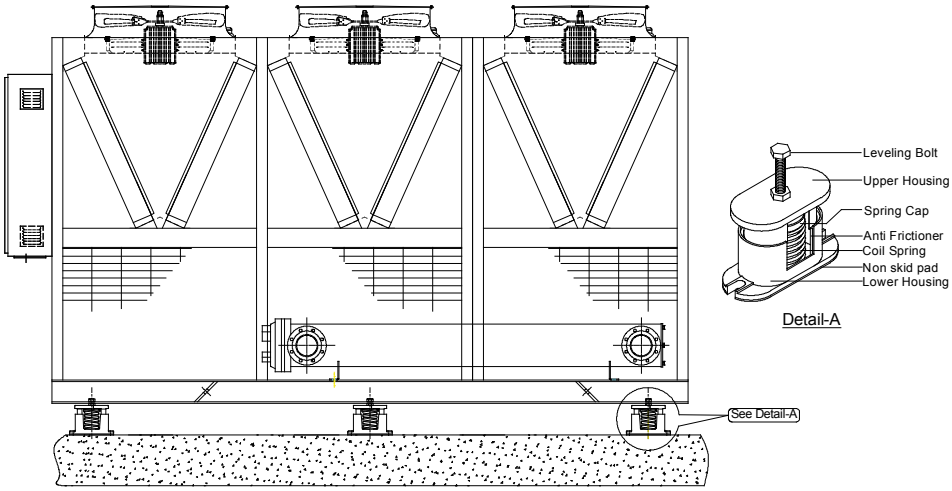

Note : SKM can supply CAVM Spring type Anti-vibration mounts (optional). The CAVM has a deflection of 25mm and each rated load can be distinguished easily as it is represented by different colours.

Water Loop Volume

In chilled water system, presence of sufficient volume of water in the piping system is crucial to achieve proper operation, unfortunately, some systems will run with less water volume than needed, this will result in inconsistence system operation, and uncontrolled compressor cycling, this condition is called " short water loop".

If a building for example didn't provide enough water volume to achieve stable controls, a storage tank should be installed to increase the water volume.

In a standard air conditioning application, the tank should be sized to attain at least 2 minute water loop and 4 minute water loop for process cooling systems.

Having enough water loop time, hence enough water volume in the evaporator loop will prevent irregular compressor cycling, which means smoother operation.

Evaporator Water Flow Rate and Temperature Range

ACMR Series can operate at wide evaporator temperature range, 8ºF (4.4ºC) - 16ºF (8.9ºC), within the water flow rate limits, and is flexible enough to permit leaving water temperatures ranging from 41ºF (5ºC) - 48ºF (8.9ºC). The minimum and maximum water flow rates of each evaporator are shown in the Evaporator Water Pressure Drop table.

Although in a lot of process cooling applications, it could be found that the flow rates or leaving temperatures are outside the specified limits, however this can be solve by making changes in the chilled water piping arrangement.

EVAPORATOR WATER FLOW RATE OUTSIDE OF SPECIFIED LIMITS

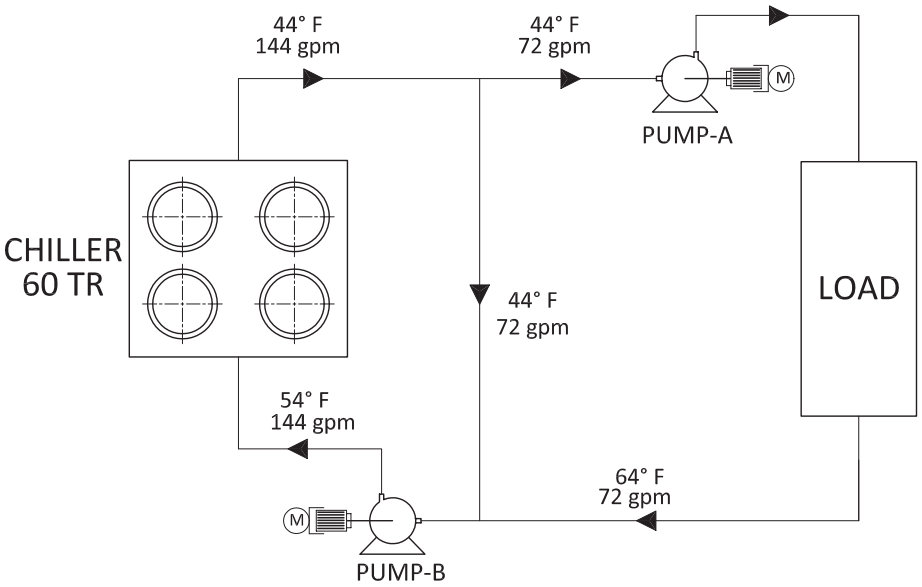

EVAPORATOR WATER TEMPERATURE OUTSIDE OF SPECIFIED LIMITS

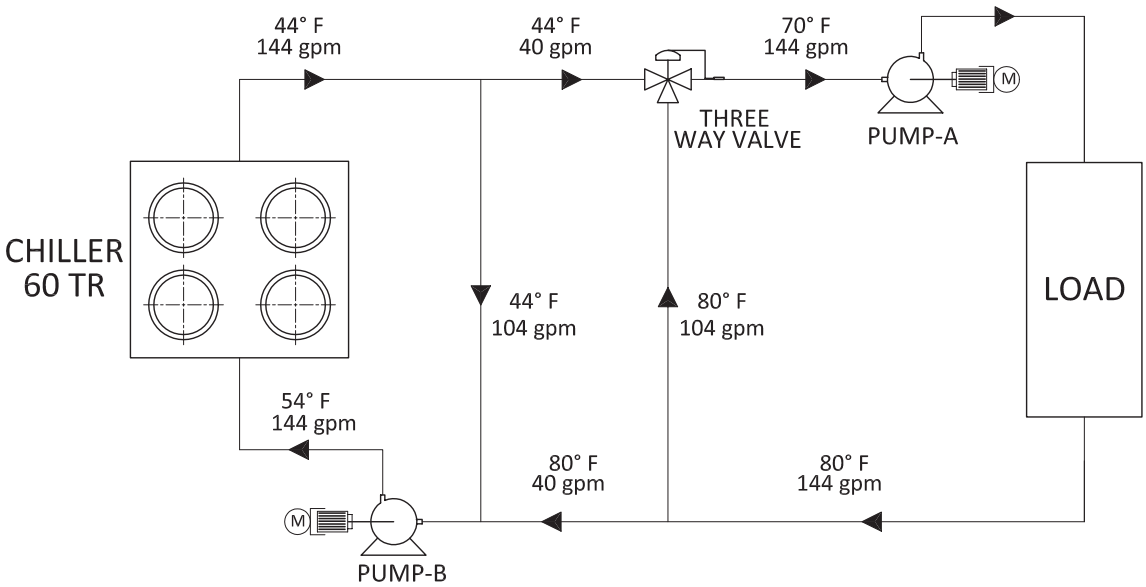

GUIDE SPECIFICATIONS

GENERAL

The contractor shall supply and install factory assembled air cooled package chillers, the number and capacity of which shall be as indicated in the capacity schedule shown on the drawings.

Each machine shall consist of at least one refrigerating circuit comprising of hermetic scroll compressor(s), air cooled condenser, evaporator, interconnecting refrigerant piping, controls, safety devices and accessories.

The machine shall be factory assembled, leak tested, evacuated and completely charged with refrigerant R410A. All factory wiring and piping shall be contained within the machine enclosure. All electrical components shall be protected from weather.

Air cooled chiller shall be rated in accordance with AHRI 550/590. Each machine shall be capable of operating satisfactorily in a wide range of ambient air temperatures ranging from 50ºF (10ºC) to 125ºF (52ºC).

Unless indicated otherwise on electrical wiring diagram, each unit shall be factory equipped to connect to only one electrical power feeder with the necessary circuit breakers,

Each unit shall be mounted on anti vibration isolators flexible enough to dampen any vibrations.

Unit shall be manufactured in an ISO 9001:2008, ISO 14000:2004 and OHSAS 18001:2007 accredited facility

COMPRESSOR

Compressor shall be suction gas cooled and hermetically sealed scroll type complete with crankcase heater, discharge temperature protection and motor protection

CONDENSER COIL

Condenser coils shall be manufacture from seamless Hi-X copper tubes mechanically bonded to aluminum fins to ensure optimum heat transfer. All condenser coils shall be leak and pressure tested at 715 psig (4930 kPa) and maximum allowable working pressure shall be 630 psig (4344 kPa).

CONDENSER FAN

The condenser fans shall be propeller type, aluminum alloy blades, directly driven by Totally Enclosed Air Over (TEAO) and class “F” insulation motor. Complete fan assembly shall be provided with fan guard.

EVAPORATOR

Units with smaller capacity (5008/6010 to 5045/6055), evaporator shall be direct expansion Brazed Plate Heat Exchanger (BPHE). Channel plates, refrigerant and water connections shall be constructed from stainless steel with pure copper brazing material. Maximum working pressure of water side shall be 421 psig (2900 kPa) and for refrigerant side shall be 493 psig (3400 kPa).

Larger capacity evaporators shall be direct expansion shell and tube. Header, tubesheet, shell, refrigerant and water connections shall be made of carbon steel. Maximum working pressure of water side shall be 145 psig (1000kPa) and for refrigerant side shall be 421 psig (2900kPa).

All Evaporators shall be insulated with 1 inch (25mm) thick flexible closed cell insulation, K factor 0.28 Btu. In/ft2.h.ºF (0.04W/m.ºK).

CASING / STRUCTURE FRAME

The unit casing shall be made of zinc coated galvanized steel sheets conforming to JIS-G 3302 and ASTM A653 which shall be phosphatized and baked after an electrostatic powder coat of approximately 60 microns. This finish and coating shall pass a 1000 hour in 5% salt spray testing at 95ºF (35ºC) and 95% RH as per ASTM B117.

Units shall be assembled on rigid structural steel skid channels painted with one coat galvanized primer and one coat black enamel.

REFRIGERANT PIPING

The refrigeration circuit piping shall be fabricated from ACR grade copper piping. Each refrigeration circuit shall includes filter drier, liquid line solenoid valve, thermostatic expansion valve, sight glass and shut off vale. Suction line shall be insulated with ½ inch (13mm) wall thickness closed cell pipe insulation.

GUIDE SPECIFICATIONS

CONTROL PANEL & CONTROLS

Control panel enclosure shall be fabricated out of heavy gauge steel in phosphatized, powder coated baked finish. The enclosure shall be conformed to IP54 as per guidelines in IEC 529. A hinged access door and key fastener shall be provided for easy access and security.
The control panel shall be ventilated using louvers and filters. The panel shall be factory wired in accordance with NEC 430 & 440, labeled, tagged and have 1 phase, 220 / 240 V for controls.

Control Panel should include the following components as minimum :

- Individual compressor and condenser fan motor contactors.
- Circuit breakers for compressors and condenser fan motors.
- Evaporator freeze protection thermostat.
- Control ON/OFF toggle switch.
- MCB for control circuit.
- Power and control circuit terminal blocks.

A Microprocessor must be provided to control the chiller as a standard. The controller shall provide the flexibility with set points and control options that can be selected prior to the commisioning. The microprocessor shall provide a complete operational control for the chiller and shall have built-in auto diagnostic capability that can signal off normal operation or alarm conditions as well as shutting down the chiller.

The main features of the Controller shall be as follows :

- A large graphical display with backlit that can be seen in bright or dim lighting..
- A user friendly generic keypad.
- Battery backed up built-in real time clock to program two start/stop daily and provide the information of running hours of the compressors.
- A multiple level passwords for security.
- Automatic lead/lag changeover of the compressors.
- Capacity control based on leaving chilled water temperature.

Easy Accessible Measurements shall include the following :

- Current Capacity Status.
- Each Circuit Status.
- Leaving and Entering chilled water temperature.
- Evaporator and Condenser pressure of each refrigerant circuit.
- Compressor elapsed run time.
- Number of Compressor Starts.
- Lockout and alarm status with time stamped.
- Water flow switch status.
- Condenser Fan ON/OFF status.
- Logging of last 100 alarms.

The following system protection controls shall automatically act to ensure system reliability and protection of the unit thru the microprocessor:

- Low suction pressure protection.
- High discharge pressure protection.
- High motor temperature.
- Freeze protection.
- Power loss.
- Chilled water flow loss.
- Sensor errors.
- Anti-recycle.
- Time delay between stages.
- Four levels of password to restrict the intentional mishandling.

Volt free contacts for run status, common fault status, auto mode status and provision for remote on/off shall be available as option.

In addition, the unit microprocessor shall be able to support the major BMS protocols such as BACnet, Modbus & LON as option.

NOTES

NOTES

NOTES

اجهزة تكييف هواء
AIR CONDITIONING EQUIPMENT

HEAD OFFICE

P.O Box: 6004
Sharjah, United Arab Emirates
Tel: +971 6 5347347
Fax: +971 6 5349292
Email: sales@skm.ae

Spare Parts Division

Sharjah, United Arab Emirates
Tel: +971 6 5347347
Fax: +971 6 5349292
Email: spareparts@skm.ae

Service Centre

Sharjah, United Arab Emirates
Tel: +971 6 5347347
Fax: +971 6 5349292
Email: aftersales@skm.ae

REGIONAL OFFICES

UAE

Abu Dhabi P.O Box: 27788
Abu Dhabi, United Arab Emirates
Tel: +971 2 6445223
Fax: +971 2 6445145
Email: abudhabisales@skm.ae

Al Ain Al Ain, United Arab Emirates
Tel: +971 3 7619921
Fax: +971 3 7619941
Email: alainsales@skm.ae

Dubai P.O Box: 98822
Dubai, United Arab Emirates
Tel: +971 4 2940900
Fax: +971 4 2940029
Email: dubaisales@skm.ae

Kuwait

P.O Box: 1215-PC 15463
Dasman, Kuwait
Tel: +965 2 2492200
Fax: +965 2 2494400
Email: kuwaitsales@skm.ae

Saudi Arabia

AL Messila HVAC Equipment Factory
(Part of SKM A/C factory in
Saudi Arabia)
Saudi Arabia, Eastern provenance
AD Dammam
2nd industrial city
Abqiq main road Hail Street
Tel: +966 13 8123332/ 4 / 5
Fax: +966 13 8123337/+96613 8123092

Egypt

9 Mosadak Street,
3rd floor, Dokki, Giza, Egypt
Tel: +20 2 37619617 / +20 2 37621974
Fax: +20 2 37621973
Email: egyptsales@skm.ae

Algeria

Aissat Idir (EX-ENMA) City
Bldg1, Flat 2, Dar El Beida Algiers,
Algeria
Tel: +213 21 508197
Fax: +213 21 508197
Email: algeriasales@skm.ae

DISTRIBUTORS

Saudi Arabia

mdaqqa@fawaz.com

Dammam
Fawaz Ref. & Air Conditioning Co.
P.O Box: 1189
Al Khobar, Saudi Arabia
Tel: +966 13 8598666
Fax: +966 13 8598520
Email: abarbarawi@fawaz.com

Jeddah
Fawaz Ref. & Air Conditioning Co.
P.O Box: 13218
Jeddah, Saudi Arabia
Tel: +966 12 6675704
Fax: +966 12 6608316
Email: jrabdu@fawaz.com

Riyadh
Fawaz Ref. & Air Conditioning Co.
P.O Box: 85123
Riyadh, Saudi Arabia
Tel: +966 11 4794499
Fax: +966 11 4785354
Email: szaidan@fawaz.com

Jordan

Ideal A/C Systems Co. L.L.C
Al Gardenz Street, Building 111,
Al Bakri Complex
P.O Box 5502 Amman, Jordan 11953
Tel: +962 6 5538640
Fax: +962 6 5538641
Email: tariq@idealac.com

Qatar

Mannai Trading Co. WLL
P.O Box: 76
Doha, Qatar
Tel: +974 4 4558787 / +974 4 4558788
Fax: +974 4 4558781
Email: dohasales@skm.ae
HVAC@mannai.com.qa

Iraq

Al Rawbitt Al Iraqia Co.
Erbil – Bagdad – Basra
Tel: +964 7507441111
+964 7711117776
+965 99608916
Email: info@alrawabitt.com

Kuwait (for Unitary Products Only)

British Link Kuwait (BLK)
P.O Box: 53054 Al Nuzha
Tel: +965 1820099
Fax: +965 22465005
Email: rawad@blk.com.kw

Forest (Global Distributor for
Minisplit, VRF & Window)
Head Office- Kuwait
Tel: +965 182 0099 - Ext 500
Fax: +965 2249 6197
Email: forest@forestunited.com
website: www.forestunited.com