APCL Series
Scroll Chillers

Range 5 TR to 90 TR
(18 kW to 306 kW)

اجهزة تكييف هواء
AIR CONDITIONING EQUIPMENT

Bulletin # 074/2011

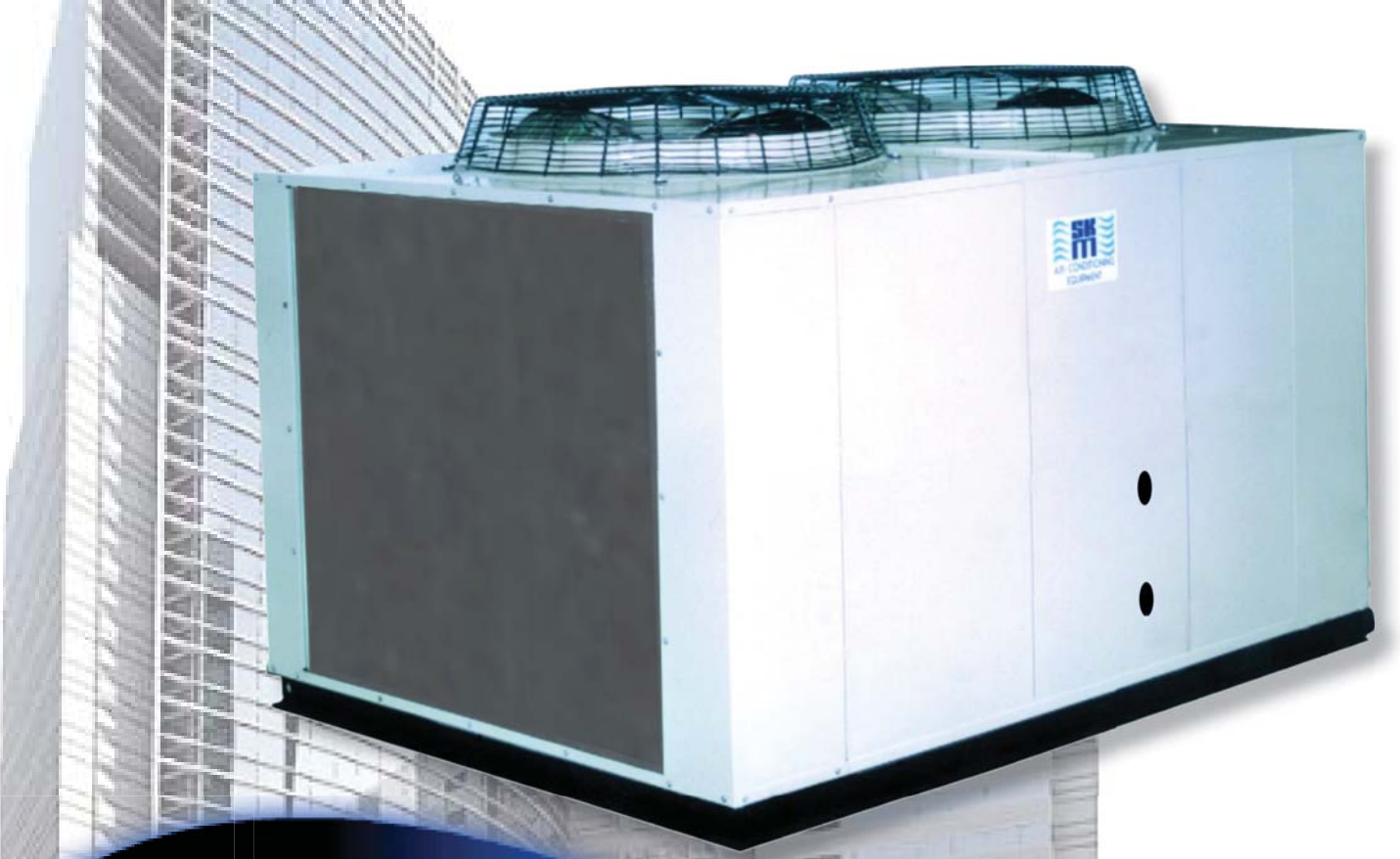

ISO 9001
BUREAU VERITAS
Certification

R-22

SKM Air Cooled Packaged Chillers
APCL Series - R22

Contents

Introduction

The tradition of producing excellent quality products to meet the market demands lead SKM to design and manufacture a low sound product line of APCL Air Cooled Chillers for commercial air conditioning market to deliver the best value and reliability for buildings such as shopping centers, warehouses, and free standing retail outlets. APCL Series Chillers are designed and manufactured to meet the requirements of the severe climatic condition of the Gulf.

The compressors with the award winning scroll technology provides the product line with superior quietness, efficiency, reliability and durability.

APCL, the new generation of SKM Chillers, units are assembled, leak tested, evacuated, internally wired and fully charged with Refrigerant R-22. Every unit is fully tested before delivery and is ready for installation.

APCL Series Scroll Chillers are designed and manufactured in accordance with SKM Quality Management System, approved to ISO-9001:2000 & 14001:2004 and rated in accordance with AHRI-550/590.

APCL Series Package Air Cooled Scroll Chillers are available in 32 models covering nominal capacity ranges from 5 TR - 74 TR (18 kW to 260 kW) in 50Hz and 6 TR - 87 TR (21 kW to 306 kW) in 60Hz.

Legend

The following legends are used throughout this manual:

cfm..... Cubic feet per minute
EER ..... Energy Efficiency Ratio
Hz ..... Hertz
kW ..... Kilowatts
kg..... Kilogram
lbs..... Pounds
l/s..... Liters per second
ft.wg..... feet of water gauge
Ph ..... Phase
Pi ..... Power Input of Compressor
TR..... Tons of Refrigeration
WPD ..... Water Pressure Drop
WFR ..... Water Flow Rate
V ..... Volts

Nomenclature

A P C L - 5 046 Y

- A P C — Air Cooled Packaged Chillers
- L — Scroll Compressor R22
- 5 — Power Supply Frequency: 5 : 50 Hz; 6 : 60 Hz
- 046 — Nominal Capacity (TR)
- Y — Power Supply Code
  - Y : 380- 415V/3Ph/50Hz
  - P : 440V/3Ph/50Hz
  - R : 380V/3Ph/60Hz
  - E : 460V/3Ph/60Hz
  - T : 220V/3Ph/60Hz

SKM Airconditioning Equipment,

Built in the Gulf...for the World

SKM Air Cooled Packaged Chillers
APCL Series - R22

General Features

To meet the challenges of todays residential and commercial airconditioning, SKM developed APCL Series that are more compact, lighter in weight, with lesser sound and vibration, to minimize space requirement and structural load on buildings.

APCL Chillers are comprised of models with single compressor for small capacity units and multiple compressors system for higher capacity units. These multiple compressors system offer efficient capacity control, fewer start/stop than larger compressor, reduced starting load and part load capacity if one compressor fails.

APCL Chillers are designed as standard to operate at a wide range of ambient temperature from 50ºF (10ºC), or lower, if optional low ambient operation kit is included, to 125ºF (52ºC).

Main Component Features

Compressors

APCL Series Chillers use high efficiency, hermetically sealed scroll compressors that have fewer moving parts compared to equivalent size of reciprocating which results to unmatched reliability and quite operation. Scroll compressors of APCL Series have superior liquid and debris handling, ability of self-compensating for wear and generate very low gas pulsation.

An external check value in the discharge line is a standard feature, to prevent the frequent recycling due to leak-back.

APCL compressors include the following features:

- Discharge Temperature Protection.
- Motor Protection.
- Disc check valve.
- Crankcase heater.
- Suction gas cooled.

Condensers

Condenser coils are manufactured from seamless copper tubes mechanically bonded to aluminium fins to ensure optimum heat transfer. All coils are tested against leakage by air pressure of 450 psig (3100 kPa) under water. All standard coils are 3 or 4 rows,12 or 14 FPI (2.1 mm or 1.8mm) fin spacing, 3/8" (9.5mm) O.D. tubes. An integral subcooling circuit is provided to increase the chiller cooling capacity, without additional operating costs.

For different application requirements, other optional condenser fin materials are available:

- Copper fins
- Copper fins only electrotinned
- Copper finned coil electro-tinned after manufacturing
- Precoated Aluminum fins
  The pre-coated is hydrophobic polyurethane resin. This option provides substantial corrosion protection beyond standard coil construction.
- Aeris Guard Coil Coating
  The Aeris Guard Coil coat is a self etching high performance modified epoxy finish that is specifically designed to coat and protect Aluminum and Copper surfaces. In addition, the coating is ideal for the protection of ferrous and non ferrous materials.

Condenser Fans & Motors

The condenser fans are propeller type, aluminium alloy blades, directly driven by electric motors. Motors are Totally Enclosed Air Over (TEAO) six pole with class 'F' insulation and IP55 protection. The TEAO and class 'F' insulation features ensure long life and are unique to SKM. The motors are factory wired to chiller unit control panel where the motor starters are located to control the operation of these motors.

The condenser fans are individually statically and dynamically balanced at the factory. Complete fan assembly is provided with suitable acrylic coated fan guard.

Evaporator

APCL evaporators are Brazed Plate Heat Exchangers (BPHE). Channel plates, refrigerant and water connections are constructed from stainless steel with pure copper as brazing material. BPHE design and assembly process are in compliance with Europe, Pressure Equipment Directive (PED 97/23/EC). Maximum working pressure of water side is 363 psig (2500 kPa) and refrigerant side is 392 psig (2700 kPa).

All evaporators are insulated with 1" (25mm) thick flexible closed cell insulation, having K factor of 0.28 Btu.in/ft^2.hr.°F (0.040 W/m.ºK).

Casing/Structure Frame

The unit casing in ***APCL*** series chillers are made of zinc coated galvanized steel sheets conforming to JIS-G 3302 and ASTM A653 which is phosphatized and baked after an electrostatic powder coat of approximately 60 microns. This finish and coating can pass a 1000 hour in 5% salt spray testing at 95°F (35°C) and 95% RH as per ASTM B117. Unit casing is provided with access doors for easy servicing/maintenance and lifting holes for rigging.

Refrigerant Piping

The refrigeration circuit piping is fabricated from ACR grade copper piping. Each refrigeration circuit includes filter drier, liquid line solenoid valve, thermostatic expansion valve, sight glass and shut off valve. The refrigeration circuit suction line is insulated with ½" (13mm) wall thickness closed cell pipe insulation.

Control Panel

The unit mounted chiller control panel enclosure is fabricated out of heavy gauge sheet steel in phosphatized powder coated baked finish. The enclosure conforms to IP54 as per guidelines in IEC 529. A hinged access door and key-fastener is provided for easy access and security. The panel is factory wired in accordance with NEC 430 & 440, labelled, tagged and features 220V / 240V controls.

- All compressors are with DOL starting.
- Individual compressor and condenser fan motor contactors.
- Circuit breakers for compressors and condenser fan motors.
- MCB for Control Circuit.
- Remote/Local Selector Switch.
- Microprocessor control boards.
- Control Relays.
- Power and control terminal blocks.

SKM Microprocessor Controller

All **APCL** Series Chillers are equipped with a full function microprocessor based controller as a standard feature. The controller is factory programmed for the control of compressors and condenser fans. The controller comes with a built in keypad and display for simple but meaningful man machine interface. This controller provides complete operational control for the chiller and has built-in auto diagnostic capability that can signal normal operation or alarm conditions as well as shutting down the chiller or system if necessary.

The Main Features of the controller are as follows:

- Built in LCD display with back light.
- Roll & push knob and 3 function buttons.
- Battery backed up built in real time clock.
- Multiple authorization level to provide tight security for the control system.
- Run hours for the compressors.
- Automatic Lead/Lag of the compressors.
- Capacity control based on leaving water temperature.
- Alarm history.
- Remote Start/Stop facility from an external control system.
- Common fault, run and auto mode indication through volt free contact.

Display Information

SKM **APCL** Chillers offer LCD display which allows the operator to access different parameters of the chiller. Operator can view and change the chiller parameters. The display information includes:

- Status
- Outputs
- Inputs
- Alarms
- Set points
- Password

System Control Philosophy

The unit may be enabled or disabled manually or through the use of an external signal from a building automation system.

Control is based upon Leaving chilled water temperature. Compressors will be staged based on the set point and actual leaving water temperature. On an increase in leaving water temperature, cooling stages will be added and on a decrease in leaving water temperature, cooling stages will be removed from the system. Water flow should be maintained as sensed by the water flow switch, for the chiller to operate.

System Protection

The intelligent microprocessor based controller monitors all the safeties related to the chiller and makes the necessary protections, by shutting down the entire chiller or the effected circuit. The protection includes:

- Low suction pressure.
- High discharge pressure.
- High compressor motor temperature.
- Freeze.
- Chilled water flow loss.
- Sensor faults.
- Compressor short cycling.

BMS Connectivity (Optional)

APCL microprocessor can support the major BMS protocols such as BACnet, Modbus & LON. Extra hardware may be required depending on the protocol. The details of the parameters to be controlled, number of chillers in the building, exact protocol, etc. are required before the order as costing of the BMS interface depends on these parameters.

Factory Installed Options

Low Ambient Operation Kit (LAO)
For operation down to 25ºF (-4ºC) ambient. Specify minimum design ambient temperature on order.

Alternative Condenser Material
Made of copper tubes and alternative fin material and/or protective coats.

- For Copper Fins, specify **(FC)**.
- For Copper Fins only electrotinned, specify **(CFT)**.
- For Copper Finned Coils with electrotinned after manufacturing, specify **(FCT)**.
- For Pre Coated aluminum fins, specify **(FAP)**.
- For Aluminum Fins with Aeris Coat Protection, specify **(FAA)**.
- For Copper Fins with Aeris Coat Protection, specify **(FCA)**.

Galvanized Frame (GFB)
Hot dip galvanized after manufacture, steel frame and base.

IP55 Control Panel Enclosure (ICP)
Control Panel for special applications to meet IP55 requirements.

Condenser Coil Guard (CGP)
Coil wire mesh guard, in galvanized and painted finish for condensers. Recommended on ground level installations where coil needs to be protected against vandalism.

Electronic Expansion Valve (EEV)
To provide energy saving benefits over mechanical thermostatic expansion valve (TXV).

Control Transformer (CXT)
This option is necessary and available for **APCL** models rated for 440V/3PH/50Hz or 460V/3PH/60Hz or power supplies without neutral. When ordering for these voltages, this option must be ordered.

Main Isolator (without door interlock) (ISO)
For main power isolation. (consult SKM)

Voltage Monitoring Module (VMM)
To prevent **APCL** unit operation in the event of Phase loss Phase reversal, and Under / Over voltage on the incoming line voltage.

Voltage Monitoring Module as per DEWA (DVM)
Under voltage relay as per DEWA regulations. This option is available for Dubai, UAE only.

Evaporator Freeze Up Protection (EFP)
Heating cable with thermostat to prevent evaporator freeze-up where low ambient temperatures below 32ºF (0ºC) are anticipated with/out chiller operation.

Ammeter & Phase Selector Switch (AMPC)
To indicate running AMPS of each compressor.

Ammeter & Phase Selector switch (AMPI)
To indicate running AMPS on main incomer of a chiller.

Voltmeter & Selector Switch (VSS)
For incoming line voltage.

Soft Starter (SSS)
To reduce the starting current of compressors using reduced voltage starting method. Compressors will be started using electronic solid state soft starters that will ramp up the speed of the compressors to rated speed within few seconds thus reducing the mechanical & electrical stresses .

Suction Pressure read out Capability (SPC)
Additional transducer in suction line to display suction pressure in microprocessor.

Pressure Gauges (SDG)
Suction and discharge indication of each refrigerant circuit.

Marine Paint (MP)
To provide increased corrosion resistant in coastal environments and off-shore locations.

Hydronic Kit (HK)
Refer to hydronic catalogue Bulletin No. 081/2010 for selection.

Options for Field Installation

Chilled Water Flow Switch (CWFS)

Anti-vibration mounts, spring type (CAVM)

Strainer (STNR)

SKM Air Cooled Packaged Chillers
APCL Series - R22

ENGINEERING SPECIFICATIONS - 50 Hz

Model	APCL	5005	5008	5010	5012	5016	5020	5024	5030
Cooling Capacity (1)	TR	5.1	7.9	9.8	11.5	15.5	19.5	23.1	30.0
	kW	17.9	27.8	34.4	40.3	54.5	68.5	81.3	105.5
Cooling Capacity (2)	TR	4.6	7.2	8.8	10.3	14.2	17.5	20.7	27.3
	kW	16.3	25.5	30.8	36.1	50.0	61.5	72.8	96.1
Compressor	-	Hermetic Scroll Compressor							
Ckt A Qty / Ckt B Qty	- x #	1 / -	1 / -	1 / -	1 / -	2 / -	2 / -	2 / -	2 / -
Oil Charge (3GS mineral oil)	US Gal	0.47 / -	0.86 / -	0.86 / -	0.86 / -	1.72 / -	1.72 / -	1.72 / -	2.48 / -
Ckt A Vol. / Ckt B Vol.	Litre	1.77 / -	3.25 / -	3.25 / -	3.25 / -	6.5 / -	6.5 / -	6.5 / -	9.4 / -
Condenser Coil	-	Air Cooled 3 or 4 rows, 12 fpi (2.1mm) fin spacing, copper tubes Aluminum fins							
Face Area (Total)	ft²	9.7	14.7	17.2	16.7	29.3	34.4	40.0	53.3
	m²	0.90	1.36	1.60	1.55	2.73	3.20	3.72	4.96
Condenser Fan	-	Propeller Direct Drive 960 rpm							
Code x Quantity	#	628 x 1	823 x 1	823 x 1	723 x 2	823 x 2	823 x 2	823 x 3	829 x 3
Air Flow Rate	cfm	4389	9135	9129	11158	18270	18258	26829	32796
	l/s	2071	4311	4308	5265	8622	8616	12661	15476
Condenser Fan Motor	-	Totally enclosed air over, Class F insulation, 6 pole, IP - 55 protected							
Size x Quantity	kW x #	0.37 x 1	1.5 x 1	1.5 x 1	0.75 x 2	1.5 x 2	1.5 x 2	1.5 x 3	1.5 x 3
Evaporator	-	Direct Expansion Brazed Plate Heat Exchangers							
Refrigerant Circuits	#	1	1	1	1	1	1	1	1
Water Volume	US Gal	0.41	0.62	0.73	0.85	1.03	1.47	2.23	2.61
	Litre	1.6	2.3	2.8	3.2	3.9	5.6	8.4	9.9
Refrigerant Charge (R22)	lbs	9.8	10.6	15.6	16.0	21.5	32.0	30.1	40.3
	kg	4.4	4.8	7.1	7.3	9.7	14.5	13.7	18.3
Operating Weight (Approx.)	lbs	629	737	843	977	1286	1430	1906	2604
	kg	285	335	382	443	584	648	864	1180

Model	APCL	5035	5038	5042	5046	5055	5060	5070	5075
Cooling Capacity (1)	TR	34.4	37.8	43.2	46.1	54.5	61.3	68.3	73.9
	kW	121.1	132.9	152.0	162.1	191.6	215.6	240.1	260.0
Cooling Capacity (2)	TR	31.4	34.4	38.2	40.6	48.8	55.5	61.7	66.5
	kW	110.5	121.1	134.4	142.9	171.7	195.2	216.9	233.9
Compressor	-	Hermetic Scroll Compressor							
Ckt A Qty / Ckt B Qty	- x #	2 / -	2 / -	2 / 2	2 / 2	2 / 2	2 / 2	2 / 2	2 / 2
Oil Charge (3GS mineral oil)	US Gal	3.04 / -	3.6 / -	1.72 / 1.72	1.72 / 1.72	2.1 / 2.1	2.48 / 2.48	3.04 / 3.04	3.6 / 3.6
Ckt A Vol. / Ckt B Vol.	Litre	11.5 / -	13.6 / -	6.5 / 6.5	6.5 / 6.5	7.95 / 7.95	9.4 / 9.4	11.5 / 11.5	13.6 / 13.6
Condenser Coil	-	Air Cooled 3 or 4 rows, 12 or 14 fpi (2.1 or 1.8mm) fin spacing, copper tubes Aluminum fins							
Face Area (Total)	ft²	64.0	72.0	72.0	72.0	80.0	96.0	106.7	106.7
	m²	5.95	6.69	6.69	6.69	7.44	8.92	9.91	9.91
Condenser Fan	-	Propeller Direct Drive 960 rpm							
Code x Quantity	#	823 x 4	829 x 4	829 x 4	829 x 4	829 x 6	829 x 6	829 x 6	829 x 6
Air Flow Rate	cfm	37164	43840	42144	42144	54672	59016	61212	61212
	l/s	17538	20688	19888	19888	25800	27850	28886	28886
Condenser Fan Motor	-	Totally enclosed air over, Class F insulation, 6 pole, IP - 55 protected							
Size x Quantity	kW x #	1.1 x 4	1.5 x 4	1.5 x 4	1.5 x 4	1.5 x 6	1.5 x 6	1.5 x 6	1.5 x 6
Evaporator	-	Direct Expansion Brazed Plate Heat Exchangers							
Refrigerant Circuits	#	1	1	2	2	2	2	2	2
Water Volume	US Gal	3.50	3.50	5.01	5.01	7.23	7.23	8.34	8.34
	Litre	13.3	13.3	18.9	18.9	27.4	27.4	31.6	31.6
Refrigerant Charge (R22)	lbs	49.0	52.8	69.4	69.4	79.3	89.6	109.1	109.5
	kg	22.2	23.9	31.5	31.5	36.0	40.6	49.5	49.6
Operating Weight (Approx.)	lbs	2886	3250	3303	3311	4318	4952	5282	5389
	kg	1310	1474	1498	1501	1959	2246	2397	2444

Table 1

Note :

1). Capacity ratings are based on standard AHRI - 550 / 590 conditions of 95°F (35°C) ambient, 44°F (6.7°C) leaving chilled water temperature, 10°F (5.5°C) range and 0.0001 ft².h°F/Btu (0.018 m².°C/kW) fouling factor.

2). Capacity ratings are based on 115°F (46°C) ambient, 45°F (7.2°C) leaving chilled water temperature, 10°F (5.5°C) range and 0.0001 ft².h°F/Btu (0.018 m².°C/kW) fouling factor.

ENGINEERING SPECIFICATIONS - 60 Hz

Model	APCL	6006	6010	6012	6014	6020	6024	6028	6035
Cooling Capacity (1)	TR	5.9	9.6	11.5	13.8	19.1	23.1	28.5	36.5
	kW	20.7	33.6	40.4	48.5	67.0	81.4	100.1	128.4
Cooling Capacity (2)	TR	5.4	8.8	10.4	12.4	17.6	20.9	25.7	33.6
	kW	18.8	31.0	36.6	43.7	61.8	73.7	90.4	118.0
Compressor	-	Hermetic Scroll Compressor							
Ckt A Qty / Ckt B Qty	- x #	1 / -	1 / -	1 / -	1 / -	2 / -	2 / -	2 / -	2 / -
Oil Charge (3GS mineral oil)	US Gal	0.47 / -	0.86 / -	0.86 / -	0.86 / -	1.72 / -	1.72 / -	1.72 / -	2.48 / -
Ckt A Vol. / Ckt B Vol.	Litre	1.77 / -	3.25 / -	3.25 / -	3.25 / -	6.5 / -	6.5 / -	6.5 / -	9.4 / -
Condenser Coil	-	Air Cooled 3 or 4 rows, 12 fpi (2.1mm) fin spacing, copper tubes Aluminum fins							
Face Area (Total)	ft²	9.7	14.7	17.2	16.7	29.3	34.4	40.0	53.3
	m²	0.90	1.36	1.60	1.55	2.73	3.20	3.72	4.96
Condenser Fan	-	Propeller Direct Drive 1150 rpm							
Code x Quantity	#	628 x 1	823 x 1	823 x 1	723 x 2	823 x 2	823 x 2	823 x 3	829 x 3
Air Flow Rate	cfm	5327	11123	11111	12836	22246	22222	32673	39672
	l/s	2514	5249	5243	6057	10498	10487	15418	18721
Condenser Fan Motor	-	Totally enclosed air over, Class F insulation, 6 pole, IP - 55 protected							
Size x Quantity	kW x #	0.55 x 1	2.2 x 1	2.2 x 1	1.1 x 2	2.2 x 2	2.2 x 2	2.2 x 3	2.2 x 3
Evaporator	-	Direct Expansion Brazed Plate Heat Exchangers							
Refrigerant Circuits	#	1	1	1	1	1	1	1	1
Water Volume	US Gal	0.41	0.73	0.85	1.03	1.47	2.23	2.61	3.50
	Litre	1.6	2.8	3.2	3.9	5.6	8.4	9.9	13.3
Refrigerant Charge (R22)	lbs	9.8	10.8	15.8	16.4	22.4	32.4	36.6	40.8
	kg	4.4	4.9	7.2	7.4	10.2	14.7	16.6	18.5
Operating Weight (Approx.)	lbs	629	737	846	984	1302	1480	2000	2642
	kg	285	335	384	446	592	672	906	1198

Model	APCL	6040	6045	6050	6055	6065	6075	6080	6090
Cooling Capacity (1)	TR	40.8	44.5	50.9	56.2	64.8	73.5	80.7	87.0
	kW	143.4	156.7	179.0	197.6	228.0	258.5	284.0	306.1
Cooling Capacity (2)	TR	37.4	40.7	45.5	49.9	58.6	67.2	73.5	78.8
	kW	131.5	143.3	160.0	175.5	206.1	236.4	258.4	277.0
Compressor	-	Hermetic Scroll Compressor							
Ckt A Qty / Ckt B Qty	- x #	2 / -	2 / -	2 / 2	2 / 2	2 / 2	2 / 2	2 / 2	2 / 2
Oil Charge (3GS mineral oil)	US Gal	3.04 / -	3.6 / -	1.72 / 1.72	1.72 / 1.72	2.1 / 2.1	2.48 / 2.48	3.04 / 3.04	3.6 / 3.6
Ckt A Vol. / Ckt B Vol.	Litre	11.5 / -	13.6 / -	6.5 / 6.5	6.5 / 6.5	7.95 / 7.95	9.4 / 9.4	11.5 / 11.5	13.6 / 13.6
Condenser Coil	-	Air Cooled 3 or 4 rows, 12 or 14 fpi (2.1 or 1.8mm) fin spacing, copper tubes Aluminum fins							
Face Area (Total)	ft²	64.0	72.0	72.0	72.0	80.0	96.0	106.7	106.7
	m²	5.95	6.69	6.69	6.69	7.44	8.92	9.91	9.91
Condenser Fan	-	Propeller Direct Drive 1150 rpm							
Code x Quantity	#	823 x 4	829 x 4	829 x 4	829 x 4	829 x 6	829 x 6	829 x 6	829 x 6
Air Flow Rate	cfm	45244	53032	51048	51048	66948	71940	74340	74340
	l/s	21351	25026	24090	24090	31593	33948	35081	35081
Condenser Fan Motor	-	Totally enclosed air over, Class F insulation, 6 pole, IP - 55 protected							
Size x Quantity	kW x #	1.5 x 4	2.2 x 4	2.2 x 4	2.2 x 4	2.2 x 6	2.2 x 6	2.2 x 6	2.2 x 6
Evaporator	-	Direct Expansion Brazed Plate Heat Exchangers							
Refrigerant Circuits	#	1	1	2	2	2	2	2	2
Water Volume	US Gal	3.82	3.82	5.01	7.23	7.23	8.34	8.34	8.34
	Litre	14.5	14.5	18.9	27.4	27.4	31.6	31.6	31.6
Refrigerant Charge (R22)	lbs	49.8	53.6	69.4	71.1	79.3	92.4	109.1	109.5
	kg	22.6	24.3	31.5	32.3	36.0	41.9	49.5	49.6
Operating Weight (Approx.)	lbs	2900	3250	3303	3391	4318	4995	5279	5387
	kg	1314	1474	1498	1538	1958	2265	2394	2443

Note :

Table 2

1). Capacity ratings are based on standard AHRI - 550 / 590 conditions of 95°F (35°C) ambient, 44°F (6.7°C) leaving chilled water temperature, 10°F (5.5°C) range and 0.0001 ft².h°F/Btu (0.018 m².°C/kW) fouling factor.

2). Capacity ratings are based on 115°F (46°C) ambient, 45°F (7.2°C) leaving chilled water temperature, 10°F (5.5°C) range and 0.0001 ft².h°F/Btu (0.018 m².°C/kW) fouling factor.

CAPACITY RATINGS - 50 Hz

APCL Model (EER)	LCWT	Condenser Entering Air Temperature ºF (ºC)																			
		95ºF (35ºC)				105ºF (40.6ºC)				115ºF (46.1ºC)				120ºF (48.9ºC)				125ºF (51.7ºC)			
		Cap	PI*	WFR	WPD	Cap	PI*	WFR	WPD	Cap	PI*	WFR	WPD	Cap	PI*	WFR	WPD	Cap	PI*	WFR	WPD
	ºF	TR	kW	Usgpm	ftwg	TR	kW	Usgpm	ftwg	TR	kW	Usgpm	ftwg	TR	kW	Usgpm	ftwg	TR	kW	Usgpm	ftwg
	ºC	kW	kW	l/s	kPa	kW	kW	l/s	kPa	kW	kW	l/s	kPa	kW	kW	l/s	kPa	kW	kW	l/s	kPa
5005 (11.5)	42	4.9	4.9	11.8	9.8	4.7	5.5	11.2	8.9	4.4	6.1	10.5	7.9	4.2	6.5	10.1	7.4	4.1	6.9	9.8	6.9
	5.6	17.3	4.9	0.7	29.4	16.4	5.5	0.7	26.5	15.4	6.1	0.7	23.5	14.9	6.5	0.6	22.1	14.3	6.9	0.6	20.6
	44	5.1	4.9	12.2	10.5	4.8	5.5	11.6	9.5	4.5	6.2	10.9	8.5	4.4	6.6	10.5	7.9	4.2	6.9	10.2	7.4
	6.7	17.9	4.9	0.8	31.3	17	5.5	0.7	28.3	16	6.2	0.7	25.3	15.4	6.6	0.7	23.8	14.9	6.9	0.6	22.2
	45	5.2	5	12.4	10.9	4.9	5.6	11.8	9.9	4.6	6.2	11.1	8.8	4.5	6.6	10.8	8.3	4.3	7	10.4	7.8
	7.2	18.2	5	0.8	32.5	17.3	5.6	0.7	29.4	16.3	6.2	0.7	26.3	15.8	6.6	0.7	24.8	15.2	7	0.7	23.2
	48	5.5	5.1	13.3	12.3	5.3	5.7	12.6	11.2	5	6.3	12	10.1	4.8	6.7	11.6	9.6	4.7	7	11.3	9
	8.9	19.4	5.1	0.8	36.7	18.5	5.7	0.8	33.6	17.6	6.3	0.8	30.3	17	6.7	0.7	28.6	16.5	7	0.7	27
5008 (10.5)	42	7.7	7.5	18.4	11.1	7.3	8.5	17.5	10.1	6.9	9.6	16.4	9	6.6	10.2	15.9	8.4	6.4	10.8	15.4	7.9
	5.6	26.9	7.5	1.2	33.2	25.6	8.5	1.1	30.1	24.1	9.6	1	26.8	23.3	10.2	1	25.1	22.5	10.8	1	23.5
	44	7.9	7.5	19	11.8	7.5	8.5	18.1	10.8	7.1	9.7	17	9.6	6.9	10.3	16.5	9	6.6	10.9	15.9	8.4
	6.7	27.8	7.5	1.2	35.4	26.5	8.5	1.1	32.1	25	9.7	1.1	28.7	24.2	10.3	1	27	23.4	10.9	1	25.2
	45	8.1	7.6	19.3	12.3	7.7	8.6	18.4	11.2	7.2	9.7	17.4	10	7	10.3	16.9	9.4	6.8	11	16.3	8.8
	7.2	28.3	7.6	1.2	36.7	27	8.6	1.2	33.4	25.5	9.7	1.1	29.9	24.7	10.3	1.1	28.1	23.9	11	1	26.3
	48	8.6	7.7	20.5	13.8	8.1	8.7	19.5	12.5	7.7	9.9	18.6	11.4	7.5	10.5	18	10.7	7.3	11.2	17.5	10.1
	8.9	30.1	7.7	1.3	41.2	28.6	8.7	1.2	37.4	27.2	9.9	1.2	34	26.4	10.5	1.1	32.1	25.6	11.2	1.1	30.1
5010 (10.6)	42	9.5	9.4	22.8	7.9	8.9	10.6	21.4	7	8.2	11.9	19.7	6.1	7.9	12.6	18.9	5.6	7.5	13.4	18	5.1
	5.6	33.4	9.4	1.4	23.6	31.3	10.6	1.3	21	28.9	11.9	1.2	18.3	27.7	12.6	1.2	16.8	26.3	13.4	1.1	15.4
	44	9.8	9.5	23.5	8.3	9.2	10.7	22.1	7.5	8.6	12	20.5	6.6	8.2	12.7	19.7	6.1	7.8	13.4	18.8	5.6
	6.7	34.4	9.5	1.5	24.9	32.4	10.7	1.4	22.3	30.1	12	1.3	19.6	28.9	12.7	1.2	18.2	27.6	13.4	1.2	16.7
	45	10	9.6	23.9	8.6	9.4	10.7	22.6	7.8	8.8	12.1	21	6.8	8.4	12.8	20.2	6.4	8.1	13.5	19.3	5.9
	7.2	35.1	9.6	1.5	25.8	33.1	10.7	1.4	23.2	30.8	12.1	1.3	20.5	29.6	12.8	1.3	19	28.3	13.5	1.2	17.6
	48	10.6	9.8	25.4	9.6	10	11	24	8.7	9.4	12.2	22.5	7.7	9	12.9	21.7	7.2	8.7	13.6	20.8	6.7
	8.9	37.2	9.8	1.6	28.7	35.2	11	1.5	26	33	12.2	1.4	23.1	31.8	12.9	1.4	21.6	30.5	13.6	1.3	20.1
5012 (10.4)	42	11.1	11.6	26.6	8.2	10.4	13	25	7.3	9.6	14.6	23.1	6.3	9.2	15.4	22.1	5.9	8.8	16.3	21.1	5.4
	5.6	39	11.6	1.7	24.4	36.6	13	1.6	21.8	33.9	14.6	1.5	19	32.4	15.4	1.4	17.5	30.9	16.3	1.3	16
	44	11.5	11.7	27.5	8.6	10.8	13.1	25.9	7.8	10	14.7	24.1	6.8	9.6	15.6	23.1	6.3	9.2	16.4	22	5.8
	6.7	40.3	11.7	1.7	25.8	37.9	13.1	1.6	23.2	35.2	14.7	1.5	20.3	33.8	15.6	1.5	18.9	32.3	16.4	1.4	17.4
	45	11.7	11.8	28	9	11	13.2	26.4	8.1	10.3	14.8	24.6	7.1	9.8	15.6	23.6	6.6	9.4	16.5	22.6	6.1
	7.2	41.1	11.8	1.8	26.8	38.7	13.2	1.7	24.1	36.1	14.8	1.6	21.2	34.6	15.6	1.5	19.7	33.1	16.5	1.4	18.2
	48	12.4	12	29.7	10	11.7	13.4	28.1	9	11	15	26.3	8	10.5	15.8	25.3	7.4	10.1	16.7	24.3	6.9
	8.9	43.6	12	1.9	29.8	41.2	13.4	1.8	26.9	38.5	15	1.7	23.8	37.1	15.8	1.6	22.3	35.6	16.7	1.5	20.7
5016 (10.3)	42	15.1	14.9	36.2	10.4	14.3	16.9	34.4	9.5	13.5	19.2	32.4	8.5	13.1	20.4	31.4	8	12.6	21.7	30.3	7.6
	5.6	53	14.9	2.3	31.1	50.4	16.9	2.2	28.3	47.5	19.2	2	25.5	46	20.4	2	24.1	44.4	21.7	1.9	22.6
	44	15.5	15	37.2	10.9	14.8	17	35.4	10	14	19.3	33.5	9	13.5	20.5	32.5	8.5	13.1	21.8	31.4	8
	6.7	54.5	15	2.3	32.7	51.9	17	2.2	29.9	49.1	19.3	2.1	27	47.6	20.5	2	25.5	46	21.8	2	24
	45	15.8	15.1	37.8	11.3	15	17.1	36.1	10.3	14.2	19.3	34.1	9.4	13.8	20.6	33.1	8.8	13.3	21.9	32	8.3
	7.2	55.4	15.1	2.4	33.7	52.9	17.1	2.3	30.9	50	19.3	2.2	28	48.5	20.6	2.1	26.5	46.9	21.9	2	24.9
	48	16.7	15.3	40.1	12.5	15.9	17.3	38.3	11.5	15.1	19.6	36.3	10.4	14.7	20.9	35.2	9.9	14.2	22.2	34.1	9.3
	8.9	58.7	15.3	2.5	37.4	56.1	17.3	2.4	34.4	53.1	19.6	2.3	31.2	51.6	20.9	2.2	29.6	50	22.2	2.2	27.9
5020 (10.6)	42	18.9	18.8	45.3	9.2	17.7	21.1	42.5	8.2	16.4	23.8	39.3	7.1	15.7	25.2	37.6	6.5	14.9	26.7	35.8	6
	5.6	66.4	18.8	2.9	27.4	62.3	21.1	2.7	24.4	57.6	23.8	2.5	21.2	55.1	25.2	2.4	19.5	52.4	26.7	2.3	17.8
	44	19.5	19	46.8	9.7	18.3	21.3	44	8.7	17.1	24	40.9	7.6	16.4	25.4	39.3	7.1	15.6	26.9	37.5	6.5
	6.7	68.5	19	3	29.1	64.5	21.3	2.8	26.1	60	24	2.6	22.8	57.5	25.4	2.5	21.1	55	26.9	2.4	19.4
	45	19.9	19.2	47.7	10.1	18.7	21.5	45	9.1	17.5	24.1	41.9	8	16.8	25.5	40.3	7.4	16.1	27	38.6	6.8
	7.2	69.9	19.2	3	30.1	65.9	21.5	2.8	27.1	61.5	24.1	2.6	23.8	59.1	25.5	2.5	22.2	56.6	27	2.4	20.5
	48	21.1	19.6	50.6	11.2	20	21.9	48	10.2	18.8	24.5	45	9.1	18.1	25.9	43.4	8.5	17.4	27.3	41.8	7.9
	8.9	74.2	19.6	3.2	33.5	70.3	21.9	3	30.4	66	24.5	2.8	27.1	63.7	25.9	2.7	25.4	61.2	27.3	2.6	23.7
5024 (9.9)	42	22.3	23.2	53.5	7.2	20.9	26	50.2	6.4	19.4	29.1	46.5	5.6	18.6	30.8	44.5	5.2	17.7	32.6	42.4	4.8
	5.6	78.4	23.2	3.4	21.5	73.6	26	3.2	19.2	68.2	29.1	2.9	16.8	65.3	30.8	2.8	15.6	62.2	32.6	2.7	14.4
	44	23.1	23.4	55.5	7.7	21.7	26.2	52.2	6.9	20.2	29.4	48.5	6.1	19.4	31	46.5	5.6	18.5	32.8	44.4	5.2
	6.7	81.3	23.4	3.5	23	76.5	26.2	3.3	20.6	71.1	29.4	3.1	18.1	68.1	31	2.9	16.8	65.1	32.8	2.8	15.5
	45	23.6	23.6	56.6	8	22.2	26.4	53.3	7.2	20.7	29.5	49.7	6.3	19.9	31.2	47.7	5.9	19	32.9	45.6	5.4
	7.2	83	23.6	3.6	23.8	78.2	26.4	3.4	21.4	72.8	29.5	3.1	18.9	69.8	31.2	3	17.6	66.8	32.9	2.9	16.2
	48	25.1	24	60.4	9	23.8	26.8	57.1	8.1	22.3	29.9	53.6	7.2	21.5	31.6	51.6	6.8	20.7	33.3	49.6	6.3
	8.9	88.5	24	3.8	26.8	83.7	26.8	3.6	24.2	78.5	29.9	3.4	21.5	75.6	31.6	3.3	20.2	72.7	33.3	3.1	18.8
5030 (10.2)	42	29.1	30.4	69.8	6.7	27.5	34	66.1	6	25.8	38.3	62	5.4	24.9	40.6	59.8	5	23.9	43	57.4	4.7
	5.6	102.2	30.4	4.4	19.9	96.9	34	4.2	18	90.8	38.3	3.9	16	87.6	40.6	3.8	15	84.2	43	3.6	13.9
	44	30	30.7	72	7.1	28.5	34.4	68.3	6.4	26.8	38.6	64.2	5.7	25.8	40.9	62	5.4	24.9	43.3	59.7	5
	6.7	105.5	30.7	4.5	21.1	100.1	34.4	4.3	19.2	94.1	38.6	4.1	17.1	90.9	40.9	3.9	16	87.6	43.3	3.8	15
	45	30.6	30.9	73.3	7.3	29	34.6	69.7	6.7	27.3	38.8	65.6	5.9	26.4	41.1	63.4	5.6	25.5	43.5	61.1	5.2
	7.2	107.5	30.9	4.6	21.9	102.1	34.6	4.4	19.9	96.1	38.8	4.1	17.8	92.9	41.1	4	16.7	89.6	43.5	3.9	15.6
	48	32.4	31.4	77.7	8.1	30.8	35.1	74	7.4	29.2	39.4	70	6.7	28.3	41.6	67.8	6.3	27.3	44.1	65.6	5.9
	8.9	113.9	31.4	4.9	24.3	108.5	35.1	4.7	22.2	102.5	39.4	4.4	20	99.4	41.6	4.3	18.9	96.1	44.1	4.1	17.8

Table 3

Note :

1. Capacity ratings are based on 10°F (5.5°C) range and 0.0001 ft².h°F/Btu (0.018 m².°C/kW) fouling factor.

* Power input mentioned in this page should not be used for cable or fuse selection. MCA and MFA values given in the electrical data pages (15 & 16) should be referred for the same.

CAPACITY RATINGS - 50 Hz

APCL Model (EER)	LCWT	Condenser Entering Air Temperature ºF (ºC)																			
		95ºF (35ºC)				105ºF (40.6ºC)				115ºF (46.1ºC)				120ºF (48.9ºC)				125ºF (51.7ºC)			
		Cap	PI*	WFR	WPD	Cap	PI*	WFR	WPD	Cap	PI*	WFR	WPD	Cap	PI*	WFR	WPD	Cap	PI*	WFR	WPD
	ºF	TR	kW	Usgpm	ftwg	TR	kW	Usgpm	ftwg	TR	kW	Usgpm	ftwg	TR	kW	Usgpm	ftwg	TR	kW	Usgpm	ftwg
	ºC	kW	kW	l/s	kPa	kW	kW	l/s	kPa	kW	kW	l/s	kPa	kW	kW	l/s	kPa	kW	kW	l/s	kPa
5035 (10.7)	42	33.3	33.8	79.8	5.3	31.5	38	75.6	4.8	29.6	42.7	70.9	4.2	28.5	45.2	68.4	4	27.4	47.9	65.9	3.7
	5.6	117	33.8	5	15.9	110.8	38	4.8	14.3	103.9	42.7	4.5	12.7	100.3	45.2	4.3	11.9	96.5	47.9	4.2	11
	44	34.4	34.2	82.7	5.7	32.7	38.3	78.4	5.1	30.7	43.1	73.7	4.6	29.7	45.6	71.2	4.3	28.6	48.3	68.6	4
	6.7	121.1	34.2	5.2	17	114.8	38.3	4.9	15.3	108	43.1	4.6	13.6	104.3	45.6	4.5	12.8	100.5	48.3	4.3	11.9
	45	35.2	34.4	84.4	5.9	33.4	38.6	80.1	5.3	31.4	43.3	75.4	4.8	30.4	45.8	72.9	4.5	29.3	48.5	70.3	4.2
	7.2	123.7	34.4	5.3	17.6	117.3	38.6	5.1	16	110.5	43.3	4.8	14.2	106.8	45.8	4.6	13.4	103	48.5	4.4	12.5
	48	37.5	35.1	90	6.7	35.7	39.2	85.6	6.1	33.7	44	80.9	5.4	32.7	46.5	78.4	5.1	31.6	49.3	75.8	4.8
	8.9	131.9	35.1	5.7	19.9	125.5	39.2	5.4	18.1	118.5	44	5.1	16.3	114.9	46.5	4.9	15.3	111	49.3	4.8	14.4
5038 (10.5)	42	36.5	36.9	87.6	6.3	34.6	41.6	82.9	5.7	32.5	46.7	77.9	5.1	31.4	49.6	75.2	4.7	30.2	52.5	72.5	4.4
	5.6	128.4	36.9	5.5	18.9	121.5	41.6	5.2	17.1	114.1	46.7	4.9	15.1	110.3	49.6	4.7	14.2	106.2	52.5	4.6	13.2
	44	37.8	37.3	90.7	6.8	35.8	41.9	85.9	6.1	33.7	47.1	80.9	5.4	32.6	49.9	78.2	5.1	31.4	52.9	75.4	4.8
	6.7	132.9	37.3	5.7	20.2	125.9	41.9	5.4	18.2	118.5	47.1	5.1	16.3	114.6	49.9	4.9	15.3	110.5	52.9	4.8	14.2
	45	38.5	37.5	92.5	7	36.6	42.1	87.8	6.3	34.4	47.4	82.7	5.7	33.3	50.2	80	5.3	32.2	53.2	77.2	5
	7.2	135.6	37.5	5.8	21	128.6	42.1	5.5	19	121.1	47.4	5.2	16.9	117.2	50.2	5	15.9	113.1	53.2	4.9	14.9
	48	41.1	38.2	98.5	7.9	39.1	42.8	93.7	7.2	36.9	48.1	88.5	6.5	35.7	51	85.8	6.1	34.6	54	82.9	5.7
	8.9	144.4	38.2	6.2	23.6	137.3	42.8	5.9	21.5	129.7	48.1	5.6	19.3	125.7	51	5.4	18.2	121.5	54	5.2	17.1
5042 (10.8)	42	41.8	41.7	100.4	7.9	39.1	46.7	93.8	7	36	52.3	86.4	5.9	34.3	55.4	82.4	5.4	32.6	58.7	78.1	4.9
	5.6	147.1	41.7	6.3	23.7	137.5	46.7	5.9	20.8	126.6	52.3	5.5	17.8	120.7	55.4	5.2	16.2	114.5	58.7	4.9	14.7
	44	43.2	42.1	103.7	8.5	40.5	47.1	97.1	7.4	37.4	52.7	89.7	6.4	35.7	55.8	85.7	5.8	33.9	59	81.5	5.3
	6.7	152	42.1	6.5	25.3	142.3	47.1	6.1	22.3	131.4	52.7	5.7	19.1	125.6	55.8	5.4	17.5	119.4	59	5.1	15.9
	45	44.1	42.4	105.8	8.8	41.3	47.4	99.1	7.7	38.2	53	91.7	6.7	36.5	56	87.7	6.1	34.8	59.2	83.5	5.6
	7.2	155	42.4	6.7	26.3	145.3	47.4	6.3	23.2	134.4	53	5.8	19.9	128.5	56	5.5	18.3	122.4	59.2	5.3	16.6
	48	47.5	43.4	113.9	10.1	44.7	48.4	107.2	9	41.6	53.9	99.8	7.8	39.9	56.9	95.8	7.2	38.2	60	91.6	6.7
	8.9	166.9	43.4	7.2	30.3	157.1	48.4	6.8	27	146.2	53.9	6.3	23.4	140.4	56.9	6	21.7	134.3	60	5.8	19.9
5046 (10.4)	42	44.6	46.6	107	9	41.6	52.1	99.9	7.9	38.3	58.3	92	6.7	36.5	61.6	87.7	6.1	34.7	65.1	83.2	5.5
	5.6	156.8	46.6	6.8	26.9	146.4	52.1	6.3	23.5	134.8	58.3	5.8	20	128.5	61.6	5.5	18.3	121.9	65.1	5.2	16.5
	44	46.1	47	110.6	9.6	43.1	52.6	103.5	8.4	39.8	58.8	95.5	7.2	38	62.1	91.1	6.6	36.1	65.6	86.6	6
	6.7	162.1	47	7	28.6	151.6	52.6	6.5	25.2	139.9	58.8	6	21.5	133.5	62.1	5.7	19.7	126.9	65.6	5.5	17.8
	45	47	47.3	112.8	9.9	44	52.8	105.6	8.8	40.6	59	97.5	7.5	38.8	62.3	93.2	6.9	36.9	65.8	88.7	6.2
	7.2	165.2	47.3	7.1	29.7	154.7	52.8	6.7	26.2	142.9	59	6.2	22.4	136.6	62.3	5.9	20.5	129.9	65.8	5.6	18.7
	48	50.6	48.3	121.3	11.5	47.5	53.9	114	10.2	44.1	60	105.9	8.8	42.3	63.3	101.6	8.1	40.4	66.7	97	7.4
	8.9	177.8	48.3	7.7	34.3	167.1	53.9	7.2	30.4	155.2	60	6.7	26.3	148.8	63.3	6.4	24.3	142.2	66.7	6.1	22.2
5055 (10.5)	42	52.8	52.8	126.6	6.6	49.7	59	119.3	5.9	46.2	66.2	111	5.2	44.4	70.1	106.5	4.8	42.4	74.2	101.8	4.4
	5.6	185.6	52.8	8	19.8	174.8	59	7.5	17.7	162.6	66.2	7	15.4	156.1	70.1	6.7	14.3	149.2	74.2	6.4	13.1
	44	54.5	53.2	130.8	7.1	51.4	59.5	123.3	6.3	47.9	66.7	114.9	5.5	46	70.6	110.4	5.1	44	74.6	105.7	4.7
	6.7	191.6	53.2	8.3	21.1	180.7	59.5	7.8	18.8	168.4	66.7	7.3	16.5	161.8	70.6	7	15.3	154.9	74.6	6.7	14.1
	45	55.5	53.5	133.1	7.3	52.3	59.8	125.6	6.5	48.8	67	117.2	5.7	46.9	70.8	112.7	5.3	45	74.9	108	4.9
	7.2	195	53.5	8.4	21.8	184	59.8	7.9	19.5	171.7	67	7.4	17.1	165.1	70.8	7.1	15.9	158.2	74.9	6.8	14.6
	48	59.7	54.6	143.3	8.4	56.5	61	135.7	7.6	53	68	127.2	6.7	51.1	71.9	122.7	6.2	49.2	75.9	118	5.8
	8.9	210.1	54.6	9	25.1	198.8	61	8.6	22.6	186.4	68	8	20	179.8	71.9	7.7	18.7	172.9	75.9	7.4	17.3
5060 (10.6)	42	59.4	59.6	142.6	8.3	56.2	66.7	135	7.5	52.7	74.9	126.5	6.6	50.8	79.4	121.9	6.2	48.8	84.2	117	5.7
	5.6	209	59.6	9	24.9	197.8	66.7	8.5	22.4	185.3	74.9	8	19.8	178.6	79.4	7.7	18.4	171.5	84.2	7.4	17.1
	44	61.3	60.2	147.1	8.8	58.1	67.3	139.4	8	54.5	75.5	130.8	7.1	52.6	80	126.2	6.6	50.6	84.8	121.4	6.1
	6.7	215.6	60.2	9.3	26.4	204.3	67.3	8.8	23.8	191.7	75.5	8.3	21.1	184.9	80	8	19.7	177.9	84.8	7.7	18.3
	45	62.3	60.5	149.6	9.1	59.1	67.6	141.8	8.2	55.5	75.8	133.2	7.3	53.6	80.3	128.6	6.8	51.6	85.1	123.8	6.4
	7.2	219.2	60.5	9.4	27.3	207.8	67.6	8.9	24.6	195.2	75.8	8.4	21.8	188.5	80.3	8.1	20.4	181.5	85.1	7.8	19
	48	66.9	61.7	160.5	10.4	63.6	68.9	152.6	9.5	60	77.1	144	8.5	58.1	81.5	139.4	8	56.1	86.2	134.7	7.5
	8.9	235.2	61.7	10.1	31.2	223.7	68.9	9.6	28.3	211	77.1	9.1	25.3	204.3	81.5	8.8	23.8	197.4	86.2	8.5	22.3
5070 (10.6)	42	65.9	67.4	158.3	8.1	62.3	75.6	149.5	7.3	58.3	84.9	139.8	6.4	56.1	90	134.7	6	53.9	95.4	129.4	5.6
	5.6	231.9	67.4	10	24.3	219	75.6	9.4	21.8	204.9	84.9	8.8	19.2	197.5	90	8.5	17.9	189.7	95.4	8.2	16.6
	44	68.3	68.1	163.8	8.7	64.5	76.4	154.9	7.8	60.5	85.7	145.2	6.9	58.3	90.8	140	6.5	56.1	96.1	134.7	6
	6.7	240.1	68.1	10.3	25.9	227	76.4	9.8	23.3	212.7	85.7	9.2	20.6	205.2	90.8	8.8	19.3	197.3	96.1	8.5	17.9
	45	69.5	68.5	166.8	9	65.8	76.7	157.8	8.1	61.7	86.1	148	7.2	59.5	91.2	142.9	6.7	57.3	96.5	137.5	6.2
	7.2	244.5	68.5	10.5	26.8	231.3	76.7	10	24.2	216.9	86.1	9.3	21.4	209.4	91.2	9	20	201.5	96.5	8.7	18.6
	48	75	70	180.1	10.4	71.2	78.3	171	9.4	67.1	87.7	161.1	8.4	64.9	92.9	155.9	7.9	62.7	98.3	150.5	7.4
	8.9	263.9	70	11.4	31	250.5	78.3	10.8	28.1	236.1	87.7	10.2	25.1	228.4	92.9	9.8	23.6	220.5	98.3	9.5	22.1
5075 (10.3)	42	71.4	76.4	171.4	9.4	67.3	85.9	161.5	8.4	62.9	96.5	150.9	7.4	60.6	102.2	145.4	6.9	58.2	108.2	139.6	6.4
	5.6	251.2	76.4	10.8	28.2	236.7	85.9	10.2	25.2	221.2	96.5	9.5	22.2	213	102.2	9.2	20.7	204.6	108.2	8.8	19.2
	44	73.9	77.2	177.4	10.1	69.7	86.7	167.4	9	65.2	97.3	156.6	8	62.9	103	150.9	7.4	60.5	109.1	145.1	6.9
	6.7	260	77.2	11.2	30.2	245.3	86.7	10.6	27	229.5	97.3	9.9	23.8	221.2	103	9.5	22.2	212.6	109.1	9.2	20.6
	45	75.3	77.7	180.7	10.4	71	87.1	170.5	9.4	66.5	97.8	159.6	8.3	64.1	103.5	153.9	7.7	61.7	109.6	148.1	7.2
	7.2	264.8	77.7	11.4	31.2	249.9	87.1	10.8	28	233.9	97.8	10.1	24.7	225.6	103.5	9.7	23.1	217	109.6	9.3	21.4
	48	81.1	79.4	194.5	12	76.7	89	184.2	10.8	72.2	99.8	173.2	9.6	69.8	105.7	167.4	9	67.2	111.9	161.4	8.4
	8.9	285.1	79.4	12.3	35.9	269.9	89	11.6	32.4	253.8	99.8	10.9	28.8	245.3	105.7	10.6	27	236.5	111.9	10.2	25.2

Table 3 ends

Note :

1. Capacity ratings are based on 10°F (5.5°C) range and 0.0001 ft².h°F/Btu (0.018 m².°C/kW) fouling factor.

* Power input mentioned in this page should not be used for cable or fuse selection. MCA and MFA values given in the electrical data pages (15 & 16) should be referred for the same.

CAPACITY RATINGS - 60 Hz

APCL Model (EER)	LCWT	Condenser Entering Air Temperature ºF (ºC)																			
		95ºF (35ºC)				105ºF (40.6ºC)				115ºF (46.1ºC)				120ºF (48.9ºC)				125ºF (51.7ºC)			
		Cap	PI*	WFR	WPD	Cap	PI*	WFR	WPD	Cap	PI*	WFR	WPD	Cap	PI*	WFR	WPD	Cap	PI*	WFR	WPD
	ºF	TR	kW	Usgpm	ftwg	TR	kW	Usgpm	ftwg	TR	kW	Usgpm	ftwg	TR	kW	Usgpm	ftwg	TR	kW	Usgpm	ftwg
	ºC	kW	kW	l/s	kPa	kW	kW	l/s	kPa	kW	kW	l/s	kPa	kW	kW	l/s	kPa	kW	kW	l/s	kPa
6006 (10.8)	42	5.7	5.9	13.7	13	5.4	6.7	12.9	11.7	5.1	7.5	12.2	10.4	4.9	7.9	11.8	9.8	4.7	8.3	11.3	9.1
	5.6	20	5.9	0.9	38.9	19	6.7	0.8	35.1	17.8	7.5	0.8	31.2	17.2	7.9	0.7	29.2	16.6	8.3	0.7	27.2
	44	5.9	6	14.1	13.8	5.6	6.7	13.4	12.5	5.3	7.5	12.6	11.1	5.1	7.9	12.2	10.4	4.9	8.4	11.7	9.7
	6.7	20.7	6	0.9	41.3	19.6	6.7	0.8	37.4	18.5	7.5	0.8	33.3	17.8	7.9	0.8	31.2	17.2	8.4	0.7	29.1
	45	6	6	14.4	14.3	5.7	6.8	13.6	13	5.4	7.5	12.8	11.6	5.2	8	12.4	10.8	5	8.4	12	10.1
	7.2	21	6	0.9	42.7	20	6.8	0.9	38.7	18.8	7.5	0.8	34.5	18.2	8	0.8	32.4	17.5	8.4	0.8	30.2
	48	6.3	6.2	15.2	15.9	6	6.9	14.5	14.5	5.7	7.6	13.7	13.1	5.5	8	13.3	12.3	5.3	8.4	12.8	11.5
	8.9	22.3	6.2	1	47.6	21.2	6.9	0.9	43.5	20.1	7.6	0.9	39	19.4	8	0.8	36.7	18.8	8.4	0.8	34.4
6010 (9.7)	42	9.3	9.5	22.3	7.6	8.8	10.6	21.2	6.9	8.3	11.9	20	6.2	8.1	12.5	19.4	5.9	7.8	13.2	18.8	5.6
	5.6	32.6	9.5	1.4	22.6	31	10.6	1.3	20.7	29.3	11.9	1.3	18.7	28.4	12.5	1.2	17.7	27.5	13.2	1.2	16.7
	44	9.6	9.6	22.9	8	9.1	10.7	21.9	7.3	8.6	12	20.7	6.6	8.4	12.6	20.1	6.3	8.1	13.3	19.5	5.9
	6.7	33.6	9.6	1.4	23.9	32	10.7	1.4	21.9	30.3	12	1.3	19.9	29.4	12.6	1.3	18.8	28.5	13.3	1.2	17.8
	45	9.7	9.7	23.4	8.3	9.3	10.8	22.3	7.6	8.8	12	21.1	6.9	8.5	12.7	20.5	6.5	8.3	13.4	19.9	6.2
	7.2	34.3	9.7	1.5	24.7	32.7	10.8	1.4	22.7	31	12	1.3	20.6	30.1	12.7	1.3	19.6	29.1	13.4	1.3	18.5
	48	10.3	9.8	24.8	9.2	9.9	11	23.6	8.4	9.3	12.2	22.4	7.7	9.1	12.9	21.8	7.3	8.8	13.6	21.1	6.9
	8.9	36.3	9.8	1.6	27.5	34.7	11	1.5	25.2	32.9	12.2	1.4	23	31.9	12.9	1.4	21.8	31	13.6	1.3	20.6
6012 (9.7)	42	11.1	11.9	26.6	8.1	10.5	13.3	25.2	7.4	9.8	14.9	23.5	6.5	9.4	15.7	22.6	6.1	9	16.6	21.7	5.7
	5.6	39	11.9	1.7	24.4	36.9	13.3	1.6	22.1	34.5	14.9	1.5	19.5	33.2	15.7	1.4	18.2	31.8	16.6	1.4	16.9
	44	11.5	12	27.6	8.7	10.9	13.4	26.1	7.9	10.2	15	24.4	7	9.8	15.8	23.6	6.6	9.4	16.8	22.7	6.1
	6.7	40.4	12	1.7	26	38.2	13.4	1.6	23.5	35.8	15	1.5	20.9	34.5	15.8	1.5	19.6	33.2	16.8	1.4	18.3
	45	11.7	12.1	28.1	9	11.1	13.5	26.6	8.2	10.4	15.1	25	7.3	10.1	15.9	24.1	6.8	9.7	16.8	23.2	6.4
	7.2	41.2	12.1	1.8	26.9	39	13.5	1.7	24.4	36.6	15.1	1.6	21.8	35.4	15.9	1.5	20.4	34	16.8	1.5	19.1
	48	12.4	12.3	29.8	10	11.8	13.7	28.3	9.1	11.1	15.3	26.7	8.2	10.7	16.2	25.8	7.7	10.4	17.1	24.9	7.2
	8.9	43.7	12.3	1.9	29.9	41.5	13.7	1.8	27.2	39.1	15.3	1.7	24.5	37.8	16.2	1.6	23	36.5	17.1	1.6	21.6
6014 (9.6)	42	13.4	14.8	32.1	8.4	12.6	16.5	30.2	7.5	11.7	18.3	28.1	6.6	11.3	19.3	27	6.1	10.8	20.4	25.9	5.7
	5.6	47	14.8	2	25	44.3	16.5	1.9	22.4	41.2	18.3	1.8	19.7	39.6	19.3	1.7	18.3	37.9	20.4	1.6	16.9
	44	13.8	15	33.1	8.8	13	16.6	31.2	8	12.2	18.5	29.2	7	11.7	19.5	28.1	6.6	11.2	20.5	26.9	6.1
	6.7	48.5	15	2.1	26.5	45.8	16.6	2	23.8	42.8	18.5	1.8	21.1	41.1	19.5	1.8	19.6	39.5	20.5	1.7	18.2
	45	14.1	15.1	33.7	9.2	13.3	16.7	31.9	8.3	12.4	18.6	29.8	7.3	12	19.6	28.7	6.9	11.5	20.6	27.6	6.4
	7.2	49.4	15.1	2.1	27.4	46.7	16.7	2	24.7	43.7	18.6	1.9	21.9	42.1	19.6	1.8	20.5	40.4	20.6	1.7	19
	48	14.9	15.4	35.8	10.2	14.1	17.1	34	9.3	13.3	18.9	31.9	8.3	12.8	19.9	30.8	7.7	12.3	21	29.6	7.2
	8.9	52.5	15.4	2.3	30.5	49.8	17.1	2.1	27.7	46.7	18.9	2	24.7	45.1	19.9	1.9	23.2	43.4	21	1.9	21.6
6020 (9.7)	42	18.5	19	44.3	8.8	17.6	21.3	42.1	8	16.6	23.7	39.8	7.3	16.1	25.1	38.6	6.9	15.6	26.5	37.4	6.5
	5.6	64.9	19	2.8	26.3	61.7	21.3	2.7	24	58.4	23.7	2.5	21.7	56.6	25.1	2.4	20.5	54.8	26.5	2.4	19.3
	44	19.1	19.2	45.7	9.3	18.2	21.5	43.6	8.6	17.2	23.9	41.3	7.7	16.7	25.2	40	7.3	16.2	26.6	38.8	6.9
	6.7	67	19.2	2.9	27.9	63.9	21.5	2.7	25.6	60.5	23.9	2.6	23.1	58.7	25.2	2.5	21.9	56.9	26.6	2.4	20.7
	45	19.4	19.3	46.6	9.7	18.5	21.6	44.5	8.9	17.6	24	42.1	8	17.1	25.4	40.9	7.6	16.5	26.7	39.7	7.2
	7.2	68.3	19.3	2.9	28.9	65.1	21.6	2.8	26.5	61.8	24	2.7	24.1	60	25.4	2.6	22.8	58.2	26.7	2.5	21.5
	48	20.6	19.7	49.4	10.8	19.7	21.9	47.2	9.9	18.7	24.4	44.9	9	18.2	25.8	43.6	8.6	17.6	27.2	42.3	8.1
	8.9	72.4	19.7	3.1	32.1	69.2	21.9	3	29.6	65.8	24.4	2.8	27	63.9	25.8	2.8	25.6	62.1	27.2	2.7	24.3
6024 (9.7)	42	22.3	23.9	53.6	7.2	21.1	26.6	50.5	6.5	19.7	29.7	47.2	5.8	18.9	31.4	45.4	5.4	18.1	33.2	43.5	5
	5.6	78.5	23.9	3.4	21.6	74.1	26.6	3.2	19.4	69.1	29.7	3	17.3	66.5	31.4	2.9	16.1	63.8	33.2	2.7	15
	44	23.1	24.1	55.5	7.7	21.9	26.9	52.5	6.9	20.5	30	49.1	6.2	19.7	31.7	47.4	5.8	19	33.5	45.5	5.4
	6.7	81.4	24.1	3.5	23	76.9	26.9	3.3	20.8	72	30	3.1	18.5	69.4	31.7	3	17.4	66.7	33.5	2.9	16.2
	45	23.6	24.2	56.6	8	22.3	27	53.6	7.2	20.9	30.2	50.3	6.4	20.2	31.9	48.5	6.1	19.5	33.7	46.7	5.7
	7.2	83	24.2	3.6	23.8	78.5	27	3.4	21.6	73.7	30.2	3.2	19.3	71.1	31.9	3.1	18.1	68.4	33.7	2.9	16.9
	48	25.1	24.7	60.3	8.9	23.9	27.5	57.4	8.2	22.6	30.7	54.1	7.3	21.8	32.5	52.4	6.9	21.1	34.3	50.6	6.5
	8.9	88.4	24.7	3.8	26.8	84.1	27.5	3.6	24.4	79.3	30.7	3.4	22	76.8	32.5	3.3	20.7	74.2	34.3	3.2	19.5
6028 (9.7)	42	27.5	28.4	66.1	6	26	31.5	62.3	5.4	24.2	35.1	58.2	4.8	23.3	37	55.9	4.4	22.3	39	53.6	4.1
	5.6	96.8	28.4	4.2	18	91.3	31.5	3.9	16.2	85.2	35.1	3.7	14.2	82	37	3.5	13.2	78.5	39	3.4	12.2
	44	28.5	28.6	68.3	6.4	26.9	31.8	64.5	5.8	25.2	35.4	60.4	5.1	24.2	37.3	58.1	4.8	23.2	39.3	55.8	4.4
	6.7	100.1	28.6	4.3	19.2	94.6	31.8	4.1	17.3	88.5	35.4	3.8	15.3	85.2	37.3	3.7	14.2	81.7	39.3	3.5	13.2
	45	29	28.8	69.7	6.6	27.5	32	65.9	6	25.7	35.5	61.7	5.3	24.8	37.5	59.5	5	23.8	39.5	57.1	4.6
	7.2	102.1	28.8	4.4	19.9	96.6	32	4.2	17.9	90.4	35.5	3.9	15.9	87.1	37.5	3.8	14.8	83.7	39.5	3.6	13.8
	48	30.8	29.3	74	7.4	29.2	32.5	70.2	6.7	27.5	36.1	66	6	26.5	38	63.7	5.6	25.5	40.1	61.3	5.3
	8.9	108.5	29.3	4.7	22.2	102.9	32.5	4.4	20.2	96.7	36.1	4.2	18	93.3	38	4	16.8	89.8	40.1	3.9	15.7
6035 (9.6)	42	35.3	38.5	84.8	5.9	33.6	42.8	80.5	5.4	31.7	47.4	76	4.8	30.7	50	73.7	4.6	29.7	52.6	71.3	4.3
	5.6	124.2	38.5	5.3	17.8	118	42.8	5.1	16.1	111.4	47.4	4.8	14.5	108	50	4.7	13.6	104.5	52.6	4.5	12.8
	44	36.5	39	87.6	6.3	34.7	43.2	83.4	5.8	32.9	47.9	78.8	5.2	31.9	50.5	76.5	4.9	30.9	53.2	74.1	4.6
	6.7	128.4	39	5.5	18.9	122.2	43.2	5.3	17.2	115.5	47.9	5	15.5	112.1	50.5	4.8	14.6	108.5	53.2	4.7	13.8
	45	37.2	39.2	89.4	6.6	35.5	43.5	85.1	6	33.6	48.2	80.5	5.4	32.6	50.8	78.2	5.1	31.6	53.5	75.8	4.8
	7.2	130.9	39.2	5.6	19.6	124.7	43.5	5.4	17.9	118	48.2	5.1	16.1	114.6	50.8	4.9	15.3	111	53.5	4.8	14.4
	48	39.6	40.1	95.1	7.4	37.8	44.4	90.7	6.8	35.9	49.2	86.1	6.1	34.9	51.8	83.7	5.8	33.8	54.6	81.2	5.5
	8.9	139.3	40.1	6	22.1	132.9	44.4	5.7	20.2	126.1	49.2	5.4	18.3	122.6	51.8	5.3	17.3	119	54.6	5.1	16.4

Table 4

Note :

1. Capacity ratings are based on 10°F (5.5°C) range and 0.0001 ft².h°F/Btu (0.018 m².°C/kW) fouling factor.

* Power input mentioned in this page should not be used for cable or fuse selection. MCA and MFA values given in the electrical data pages (15 & 16) should be referred for the same.

CAPACITY RATINGS - 60 Hz

APCL Model (EER)	LCWT	Condenser Entering Air Temperature ºF (ºC)																			
		95ºF (35ºC)				105ºF (40.6ºC)				115ºF (46.1ºC)				120ºF (48.9ºC)				125ºF (51.7ºC)			
		Cap	PI*	WFR	WPD	Cap	PI*	WFR	WPD	Cap	PI*	WFR	WPD	Cap	PI*	WFR	WPD	Cap	PI*	WFR	WPD
	ºF	TR	kW	Usgpm	ftwg	TR	kW	Usgpm	ftwg	TR	kW	Usgpm	ftwg	TR	kW	Usgpm	ftwg	TR	kW	Usgpm	ftwg
	ºC	kW	kW	l/s	kPa	kW	kW	l/s	kPa	kW	kW	l/s	kPa	kW	kW	l/s	kPa	kW	kW	l/s	kPa
6040 (10.0)	42	39.4	42.5	94.6	6.4	37.4	47.2	89.8	5.8	35.3	52.4	84.7	5.2	34.2	55.2	82.1	4.9	33.1	58.1	79.4	4.6
	5.6	138.7	42.5	6	19.2	131.5	47.2	5.7	17.4	124.2	52.4	5.3	15.6	120.3	55.2	5.2	14.7	116.3	58.1	5	13.8
	44	40.8	43	97.9	6.8	38.7	47.8	93	6.2	36.6	53	87.8	5.6	35.5	55.8	85.2	5.3	34.3	58.7	82.4	5
	6.7	143.4	43	6.2	20.4	136.2	47.8	5.9	18.5	128.7	53	5.5	16.7	124.8	55.8	5.4	15.7	120.8	58.7	5.2	14.8
	45	41.6	43.3	99.8	7.1	39.5	48	94.9	6.4	37.4	53.3	89.7	5.8	36.3	56.1	87	5.5	35.1	59	84.3	5.2
	7.2	146.2	43.3	6.3	21.2	139	48	6	19.3	131.5	53.3	5.7	17.4	127.5	56.1	5.5	16.4	123.5	59	5.3	15.5
	48	44.2	44.2	106.2	7.9	42.2	49	101.2	7.3	40	54.4	96	6.6	38.9	57.3	93.2	6.2	37.7	60.3	90.5	5.9
	8.9	155.6	44.2	6.7	23.8	148.3	49	6.4	21.7	140.6	54.4	6.1	19.7	136.6	57.3	5.9	18.6	132.6	60.3	5.7	17.6
6045 (9.6)	42	43.1	46.5	103.4	7.6	40.9	51.7	98.1	6.9	38.5	57.4	92.5	6.1	37.3	60.4	89.6	5.8	36.1	63.5	86.7	5.4
	5.6	151.6	46.5	6.5	22.6	143.7	51.7	6.2	20.5	135.6	57.4	5.8	18.4	131.3	60.4	5.7	17.3	127	63.5	5.5	16.3
	44	44.5	46.9	106.9	8	42.3	52.2	101.5	7.3	39.9	58	95.8	6.6	38.7	61	92.9	6.2	37.4	64.1	89.9	5.8
	6.7	156.7	46.9	6.7	24.1	148.7	52.2	6.4	21.8	140.4	58	6	19.6	136.1	61	5.9	18.5	131.7	64.1	5.7	17.4
	45	45.4	47.2	108.9	8.3	43.1	52.6	103.5	7.6	40.7	58.3	97.8	6.8	39.5	61.4	94.8	6.4	38.3	64.5	91.8	6.1
	7.2	159.6	47.2	6.9	24.9	151.6	52.6	6.5	22.6	143.3	58.3	6.2	20.4	139	61.4	6	19.2	134.5	64.5	5.8	18.1
	48	48.2	48.1	115.6	9.3	45.9	53.5	110.1	8.5	43.5	59.4	104.3	7.7	42.2	62.6	101.4	7.3	41	65.9	98.3	6.9
	8.9	169.4	48.1	7.3	27.8	161.3	53.5	6.9	25.4	152.9	59.4	6.6	23	148.5	62.6	6.4	21.8	144.1	65.9	6.2	20.6
6050 (9.9)	42	49.3	52.6	118.4	10.9	46.3	58.5	111.2	9.7	43	65.2	103.3	8.4	41.3	68.8	99.1	7.7	39.5	72.5	94.7	7.1
	5.6	173.4	52.6	7.5	32.7	163	58.5	7	28.9	151.4	65.2	6.5	25.1	145.2	68.8	6.3	23.1	138.8	72.5	6	21.2
	44	50.9	53.1	122.2	11.6	47.9	59	115	10.3	44.6	65.7	107	9	42.8	69.3	102.7	8.3	41	73.1	98.3	7.6
	6.7	179	53.1	7.7	34.8	168.5	59	7.3	30.9	156.8	65.7	6.8	26.9	150.6	69.3	6.5	24.8	144.1	73.1	6.2	22.8
	45	51.9	53.3	124.4	12.1	48.8	59.3	117.2	10.7	45.5	66	109.2	9.3	43.7	69.6	104.9	8.7	41.9	73.4	100.5	8
	7.2	182.4	53.3	7.9	36	171.7	59.3	7.4	32.1	160	66	6.9	27.9	153.8	69.6	6.6	25.9	147.3	73.4	6.3	23.8
	48	55.6	54.5	133.5	13.8	52.6	60.5	126.2	12.4	49.2	67.3	118.1	10.9	47.4	70.9	113.8	10.1	45.5	74.7	109.3	9.4
	8.9	195.7	54.5	8.4	41.4	184.9	60.5	8	37	173	67.3	7.4	32.5	166.7	70.9	7.2	30.3	160.1	74.7	6.9	28
6055 (9.9)	42	54.4	59	130.6	7	51	65.5	122.5	6.2	47.3	72.7	113.5	5.4	45.3	76.6	108.7	5	43.2	80.7	103.7	4.5
	5.6	191.4	59	8.2	21	179.5	65.5	7.7	18.6	166.4	72.7	7.2	16.1	159.4	76.6	6.9	14.8	152	80.7	6.5	13.6
	44	56.2	59.6	134.9	7.5	52.8	66.1	126.6	6.6	49	73.3	117.5	5.8	46.9	77.2	112.7	5.3	44.8	81.3	107.6	4.9
	6.7	197.6	59.6	8.5	22.4	185.5	66.1	8	19.8	172.2	73.3	7.4	17.2	165.1	77.2	7.1	15.9	157.7	81.3	6.8	14.6
	45	57.2	59.9	137.2	7.7	53.7	66.5	128.9	6.9	49.9	73.7	119.8	6	47.9	77.6	114.9	5.5	45.7	81.6	109.8	5.1
	7.2	201.1	59.9	8.7	23.1	188.9	66.5	8.1	20.5	175.5	73.7	7.6	17.8	168.4	77.6	7.2	16.5	160.9	81.6	6.9	15.1
	48	61.5	61.5	147.6	8.9	58	68	139.1	7.9	54.1	75.3	129.8	6.9	52	79.2	124.8	6.4	49.8	83.2	119.6	5.9
	8.9	216.3	61.5	9.3	26.6	203.9	68	8.8	23.7	190.2	75.3	8.2	20.8	182.9	79.2	7.9	19.3	175.3	83.2	7.5	17.8
6065 (9.7)	42	62.8	66.3	150.8	9.3	59.4	73.6	142.6	8.3	55.7	81.7	133.6	7.3	53.7	86.1	128.9	6.9	51.6	90.8	123.9	6.4
	5.6	221	66.3	9.5	27.7	208.9	73.6	9	24.9	195.8	81.7	8.4	22	188.8	86.1	8.1	20.5	181.6	90.8	7.8	19
	44	64.8	67	155.6	9.8	61.3	74.3	147.2	8.8	57.6	82.4	138.1	7.8	55.5	86.8	133.3	7.3	53.5	91.5	128.3	6.8
	6.7	228	67	9.8	29.4	215.7	74.3	9.3	26.4	202.4	82.4	8.7	23.4	195.4	86.8	8.4	21.9	188.1	91.5	8.1	20.3
	45	65.9	67.3	158.2	10.2	62.4	74.6	149.8	9.1	58.6	82.8	140.6	8.1	56.6	87.2	135.8	7.6	54.5	91.9	130.8	7.1
	7.2	231.9	67.3	10	30.4	219.5	74.6	9.5	27.3	206.1	82.8	8.9	24.2	199	87.2	8.6	22.7	191.7	91.9	8.3	21.1
	48	70.7	68.8	169.7	11.6	67.1	76.2	161.1	10.5	63.2	84.5	151.7	9.4	61.2	88.9	146.8	8.8	59	93.6	141.6	8.2
	8.9	248.7	68.8	10.7	34.8	236	76.2	10.2	31.4	222.3	84.5	9.6	28	215.1	88.9	9.3	26.3	207.6	93.6	8.9	24.6
6075 (9.9)	42	71.1	74.9	170.5	9.4	67.5	83	161.9	8.5	63.6	92.1	152.7	7.6	61.6	97	147.9	7.2	59.6	102.2	143	6.7
	5.6	249.9	74.9	10.8	28	237.3	83	10.2	25.4	223.8	92.1	9.6	22.7	216.8	97	9.3	21.4	209.6	102.2	9	20.1
	44	73.5	75.7	176.4	10	69.8	83.8	167.6	9.1	66	93	158.3	8.1	63.9	98	153.4	7.7	61.9	103.2	148.5	7.2
	6.7	258.5	75.7	11.1	29.8	245.6	83.8	10.6	27.1	232	93	10	24.3	224.9	98	9.7	22.9	217.5	103.2	9.4	21.5
	45	74.8	76.1	179.5	10.3	71.1	84.3	170.7	9.4	67.2	93.5	161.3	8.4	65.2	98.5	156.4	7.9	63.1	103.7	151.4	7.5
	7.2	263.1	76.1	11.3	30.8	250.1	84.3	10.8	28	236.4	93.5	10.2	25.2	229.2	98.5	9.9	23.8	221.9	103.7	9.6	22.3
	48	80.4	77.8	193.1	11.8	76.7	86.2	184.1	10.8	72.7	95.6	174.5	9.8	70.7	100.6	169.6	9.3	68.5	105.9	164.5	8.7
	8.9	282.9	77.8	12.2	35.4	269.7	86.2	11.6	32.3	255.8	95.6	11	29.2	248.5	100.6	10.7	27.7	241.1	105.9	10.4	26.1
6080 (9.8)	42	78.1	84.4	187.4	11.2	74	93.7	177.5	10.1	69.6	103.9	167.1	9	67.4	109.4	161.7	8.5	65.1	115.1	156.2	7.9
	5.6	274.6	84.4	11.8	33.4	260.1	93.7	11.2	30.2	244.9	103.9	10.5	26.9	237	109.4	10.2	25.3	228.9	115.1	9.9	23.7
	44	80.7	85.3	193.8	11.9	76.5	94.6	183.7	10.8	72.1	105	173.1	9.6	69.8	110.4	167.6	9.1	67.5	116.2	162	8.5
	6.7	284	85.3	12.2	35.6	269.2	94.6	11.6	32.2	253.7	105	10.9	28.8	245.6	110.4	10.6	27.1	237.4	116.2	10.2	25.4
	45	82.2	85.7	197.2	12.3	77.9	95.2	187	11.1	73.5	105.5	176.3	10	71.2	111	170.8	9.4	68.8	116.8	165.1	8.8
	7.2	288.9	85.7	12.4	36.8	274	95.2	11.8	33.3	258.4	105.5	11.1	29.8	250.3	111	10.8	28	242	116.8	10.4	26.3
	48	88	87.7	211.2	14	83.7	97.3	200.9	12.8	79.2	107.9	190.2	11.5	76.9	113.5	184.6	10.9	74.6	119.5	178.9	10.2
	8.9	309.5	87.7	13.3	41.9	294.4	97.3	12.7	38.1	278.7	107.9	12	34.4	270.5	113.5	11.6	32.5	262.2	119.5	11.3	30.6
6090 (9.5)	42	84.2	95.4	202.1	12.9	79.6	106	190.9	11.6	74.8	117.5	179.4	10.3	72.3	123.5	173.5	9.7	69.8	129.8	167.4	9
	5.6	296.1	95.4	12.7	38.6	279.8	106	12	34.6	262.9	117.5	11.3	30.8	254.2	123.5	10.9	28.9	245.4	129.8	10.6	27
	44	87	96.6	208.9	13.7	82.3	107.2	197.5	12.4	77.4	118.7	185.7	11	74.8	124.8	179.6	10.3	72.2	131.1	173.4	9.7
	6.7	306.1	96.6	13.2	41.1	289.5	107.2	12.5	36.9	272.1	118.7	11.7	32.9	263.2	124.8	11.3	30.8	254.1	131.1	10.9	28.9
	45	88.5	97.1	212.5	14.2	83.7	107.8	201	12.8	78.8	119.4	189	11.4	76.2	125.5	182.9	10.7	73.6	131.8	176.6	10
	7.2	311.4	97.1	13.4	42.4	294.5	107.8	12.7	38.2	277	119.4	11.9	34	268	125.5	11.5	31.9	258.8	131.8	11.1	29.9
	48	94.5	99.3	226.8	16.1	89.7	110.3	215.3	14.5	84.7	122.2	203.2	13	82.1	128.5	197.1	12.3	79.5	135.2	190.8	11.6
	8.9	332.4	99.3	14.3	48	315.4	110.3	13.6	43.5	297.8	122.2	12.8	39	288.8	128.5	12.4	36.8	279.6	135.2	12	34.6

Note :

Table 4 ends

1. Capacity ratings are based on 10°F (5.5°C) range and 0.0001 ft².h°F/Btu (0.018 m².°C/kW) fouling factor.

* Power input mentioned in this page should not be used for cable or fuse selection. MCA and MFA values given in the electrical data pages (15 & 16) should be referred for the same.

Capacity Correction & Limits

Evaporator Chiller Limits of Operation

Maximum LCWT : 48°F (8.9°C)
Maximum ECWT : 76°F (24.4°C)*
Minimum LCWT : 42°F (5.6°C)
For Lower LCWT ethylene glycol solution to be used consult SKM.
*(*For short periods.)*

Range & Flow Limits

Range limit 8°F - 16°F (4.4°C - 8.9°C) except where limited by water flow rate limits for evaporator. For minimum & maximum water flow rate refer to page 13.

Working & Test Pressures

Evaporator Pressure		Refrigerant	Water
Maximum Working Pressure	psig	392	363
	kPa	2700	2500
Test Pressure	psig	725	725
	kPa	5000	5000

Table 5

Condenser Pressure		Refrigerant
Maximum Working Pressure	psig	300
	kPa	2068
Test Pressure	psig	450
	kPa	3102

Table 6

Cooler Fouling Factors

The units are rated at 0.0001 ft².h.°F/Btu (0.018m².°C/KW) Other than this fouling factor, apply the correction factors to get the effect on cooling capacity and power input.

Fouling Factor		Capacity Multiplier	Power Multiplier
IP	SI		
0.0001 *	0.018	1	1
0.00025	0.044	0.99	1
0.0005	0.088	0.98	0.99
0.001	0.176	0.95	0.98
0.002	0.352	0.90	0.96

*Standard fouling factor, as per AHRI standard 550/590.

Table 7

Fin Material Correction Factors

The unit ratings are based on copper tube and aluminium fins condenser. For alternative condenser material the following factors apply : ***(Note: Aeris Coating does not affect Capacity and Power).***

Condenser Fin Material	Capacity Multiplier	Power Multiplier
Precoated Aluminum	0.995	1.001
Copper	1.01	0.992

Table 8

Altitude Correction Factor

The units ratings are based on sea level. Above sea level apply the following correction factors:

Altitude		Capacity Multiplier	Power Multiplier
Feet	Meters		
0	0	1	1
2000	610	0.99	1.01
4000	1219	0.98	1.02
6000	1829	0.97	1.03
8000	2438	0.96	1.04
10000	3048	0.95	1.05

Table 9

Range Correction Factors

Capacity ratings based on 10°F (5.5°C) chilled water range. For other than this range please use correction factor below.

Range		Capacity Multiplier	Power Multiplier
°F	°C		
8	4.4	0.995	0.998
10	5.5	1	1
12	6.7	1.005	1.002
14	7.8	1.01	1.004
16	8.9	1.015	1.006

Table 10

Capacity Control Steps

Models		Capacity Step
5005	6006	100 - 0
5008	6010	100 - 0
5010	6012	100 - 0
5012	6014	100 - 0
5016	6020	100 - 50 - 0
5020	6024	100 - 50 - 0
5024	6028	100 - 50 - 0
5030	6035	100 - 50 - 0
5035	6040	100 - 56 - 0
5038	6045	100 - 50 - 0
5042	6050	100 - 77 - 54 - 27 - 0
5046	6055	100 - 75 - 50 - 25 - 0
5055	6065	100 - 78 - 56 - 28 - 0
5060	6075	100 - 75 - 50 - 25 - 0
5070	6080	100 - 78 - 56 - 28 - 0
5075	6090	100 - 75 - 50 - 25 - 0

Table 11

Evaporator Water Pressure Drop

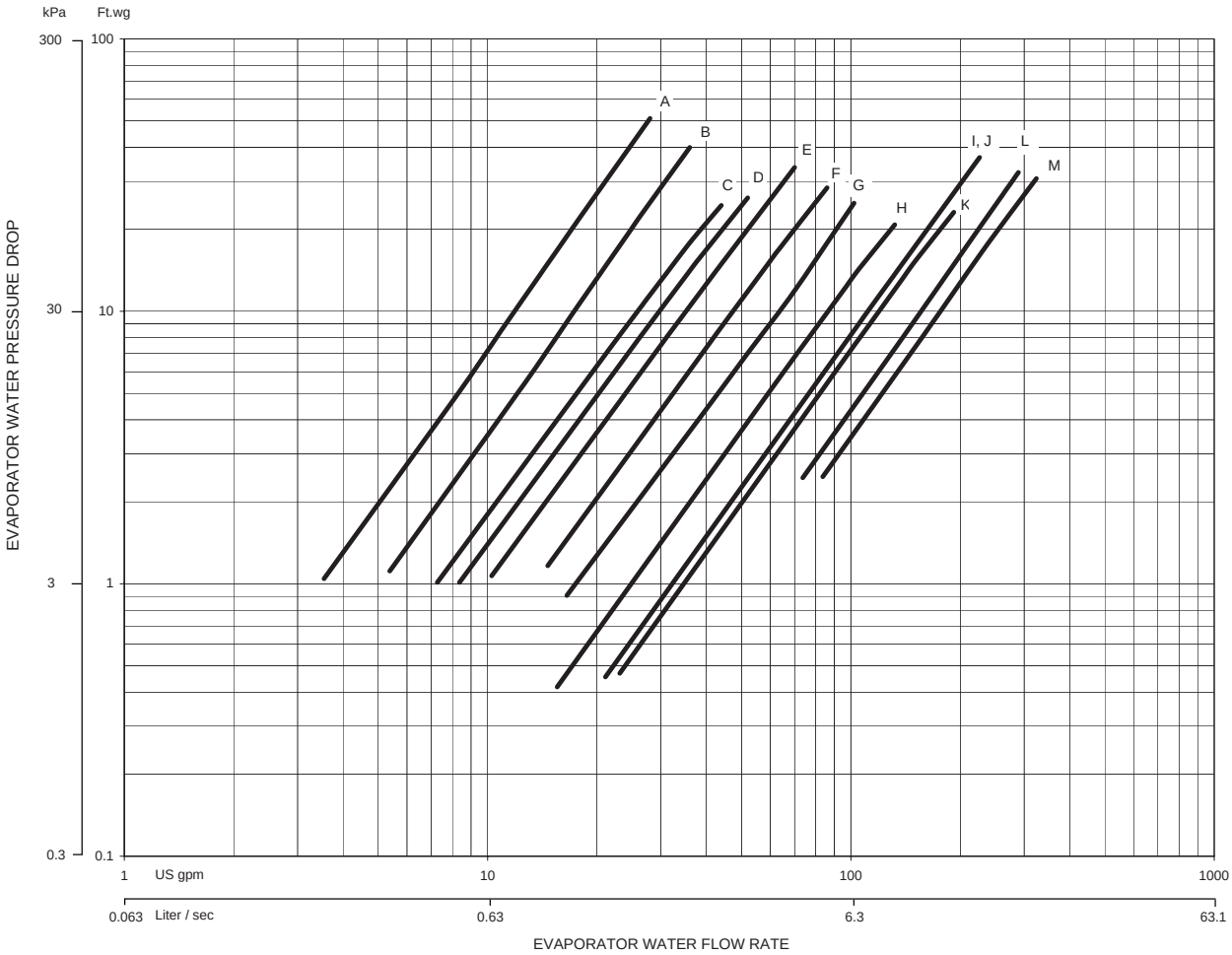

Graph	APCL Models		Water Flow Rate Range	
	50Hz	60Hz	Minimum Usgpm / L/s	Maximum Usgpm / L/s
A	5005	6006	4.0 / 0.25	28.0 / 1.77
B	5008	-	8.0 / 0.50	36.0 / 2.27
C	5010	6010	10.0 / 0.63	44.0 / 2.78
D	5012	6012	12.0 / 0.76	52.0 / 3.28
E	5016	6014	18.0 / 1.14	70.0 / 4.41
F	5020	6020	22.0 / 1.39	86.0 / 5.23
G	5024	6024	24.0 / 1.51	102.0 / 6.44
H	5030	6028	34.0 / 2.15	132.0 / 8.33
I	5035, 5038	6035	40.0 / 2.52	160.0 / 10.09
J	5042, 5046	6050	46.0 / 2.90	226 / 14.26
K	-	6040, 6045	48.0 / 3.03	192.0 / 12.11
L	5055, 5060	6055, 6065	60.0 / 3.79	286.0 / 11.73
M	5070, 5075	6075, 6080, 6090	80.0 / 5.05	324.0 / 20.44

Table 12

Selection Procedure

APCL Chillers should be selected with specific Design Considerations, requirements and parameters of the intended application. Care and good engineering should lead to an efficient and cost effective selection. Sample procedures are shown below:

Example 1: (IP System)

Select an Air Cooled Package Chiller giving a capacity of 30 TR to cool water from 56ºF to 44ºF at 2000 ft. altitude, 0.00075 fouling factor, power supply 415V/3Ph/50Hz and 115 ºF ambient Temperature.

Find compressor power input in kW.

Selection:

Apply the following factors to convert the required capacity to tabulated capacity ratings.

	Capacity Multiplier	Power Multiplier
Range (12 ºF)	1.005	1.002
Altitude	0.99	1.01
Fouling Factor	0.965	0.985

$$\text{Tabulated rated capacity} = \frac{30}{1.005 \times 0.99 \times 0.965}$$

$$= 31.2 \text{ TR}$$

Refer to capacity rating 50Hz under 115 ºF condenser entering air temperature and select a chiller giving a capacity nearest larger to 31.2 TR at 44 ºF LCWT. Select model APCL 5038 giving a capacity of 33.7 TR and PI = 47. 1 kW.

Apply correction factors to the selected unit to find actual capacity and P I.

Capacity = 33.7 x 1.005 x 0.99 x 0.965
= 32.4 TR

P I = 47. 1 x 1.002 x 1.01 x 0.985
= 47.0 kW

Calculation of Water Flow Rate (WFR)

To calculate the water flow rate to be circulated, use the following:

$$\text{WFR (US gpm)} = \frac{\text{C.CAP (TR)} \times 24}{\text{Range (ºF)}}$$

$$= \frac{32.4 \times 24}{12} = 64.8 \text{ US gpm}$$

Determine the pressure drop from chart on Page 13, using 64.8 gpm, pressure drop reading is 3.6 ft wg.

Example 2: (SI System)

Select an Air Cooled Package Chiller giving a capacity of 100 kW of refrigeration to cool water from 14.5ºC to 6.7ºC at 610M altitude, 0.132 fouling factor, power supply 380V/3Ph/60Hz and 40.6 ºC ambient Temperature.

Find compressor power input in kW.

Selection:

Apply the following factors to convert the required capacity to tabulated capacity ratings.

	Capacity Multiplier	Power Multiplier
Range (7.8 ºC)	1.010	1.004
Altitude	0.99	1.01
Fouling Factor	0.965	0.985

$$\text{Tabulated rated capacity} = \frac{100}{1.01 \times 0.99 \times 0.965}$$

$$= 103.6 \text{ kW}$$

Refer to capacity rating 60Hz under 40.6 ºC condenser entering air temperature and select a chiller giving a capacity nearest larger to 103.6 at 6.7 ºC LCWT. Select model APCL 6035 giving a capacity of 122.2 kW and PI = 43.2 kW.

Apply correction factors to the selected unit to find actual capacity and P I.

Capacity = 122.2 x 1.01 x 0.99 x 0.965
= 117.9 kW

P I = 43.2 x 1.004 x 1.01 x 0.985
= 43. 1 kW

Calculation of Water Flow Rate (WFR)

To calculate the water flow rate to be circulated, use the following:

$$\text{WFR (L/s)} = \frac{\text{C.CAP (kW)} \times 0.239}{\text{Range (ºC)}}$$

$$= \frac{117.9 \times 0.239}{7.8} = 3.6 \text{ l/s.}$$

Determine the pressure drop from chart on Page 13, using 3.6 l/s, pressure drop reading is 9.1 kPa.

For more details refer to other specifications and dimensional drawings for the selected model.

ELECTRICAL DATA

Power Supply : 380-415V/3PH/50Hz

Model	Unit Characteristic			Compressor			Condenser Fan Motor		
APCL	MFA	MCA	ICF	QTY	RLA	LRA	QTY	FLA	LRA
5005	32	17	105	1	13	101	1	0.9	4
5008	50	29	134	1	20	118	1	3.5	16
5010	63	35	156	1	25	140	1	3.5	16
5012	80	41	182	1	30	174	2	1.7	5.8
5016	80	52	158	2	20	118	2	3.5	16
5020	100	63	185	2	25	140	2	3.5	16
5024	125	78	227	2	30	174	3	3.5	16
5030	125	87	282	2	34	225	3	3.5	16
5035	160	98	325	1 + 1	42 + 34	272 + 225	4	2.8	11
5038	160	109	341	2	42	272	4	3.5	16
5042	160	132	281	2 + 2	30 + 25	174 + 140	4	3.5	16
5046	200	142	291	4	30	174	4	3.5	16
5055	200	158	353	2 + 2	34 + 30	225 + 174	6	3.5	16
5060	200	166	361	4	34	225	6	3.5	16
5070	250	184	416	2 + 2	42 + 34	272 + 225	6	3.5	16
5075	250	200	432	4	42	272	6	3.5	16

Table 13

Power Supply : 440V/3PH/50Hz

Model	Unit Characteristic			Compressor			Condenser Fan Motor		
APCL	MFA	MCA	ICF	QTY	RLA	LRA	QTY	FLA	LRA
5005	32	17	105	1	13	101	1	1.1	4.3
5008	50	29	134	1	20	118	1	3.6	16
5010	63	35	156	1	25	140	1	3.6	16
5012	80	41	184	1	30	174	2	1.8	7.9
5016	80	52	158	2	20	118	2	3.6	16
5020	100	63	185	2	25	140	2	3.6	16
5024	125	78	227	2	30	174	3	3.6	16
5030	125	87	282	2	34	225	3	3.6	16
5035	160	97	327	1 + 1	42 + 34	272 + 225	4	2.6	13.1
5038	160	109	341	2	42	272	4	3.6	16
5042	160	132	281	2 + 2	30 + 25	174 + 140	4	3.6	16
5046	200	142	291	4	30	174	4	3.6	16
5055	200	158	353	2 + 2	34 + 30	225 + 174	6	3.6	16
5060	200	166	361	4	34	225	6	3.6	16
5070	250	184	416	2 + 2	42 + 34	272 + 225	6	3.6	16
5075	250	200	432	4	42	272	6	3.6	16

Table 14

Power Supply : 460V/3PH/60Hz

Model	Unit Characteristic			Compressor			Condenser Fan Motor		
APCL	MFA	MCA	ICF	QTY	RLA	LRA	QTY	FLA	LRA
6006	32	18	105	1	13	100	1	1.3	5.2
6010	50	30	146	1	20	125	1	5	21
6012	63	36	171	1	25	150	1	5	21
6014	80	41	194	1	28	179	2	3.1	11.8
6020	80	55	171	2	20	125	2	5	21
6024	100	66	201	2	25	150	2	5	21
6028	125	78	238	2	28	179	3	5	21
6035	125	92	290	2	34	225	3	5	21
6040	160	101	333	1 + 1	42 + 34	272 + 225	4	3.5	16.5
6045	160	115	350	2	42	272	4	5	21
6050	160	133	293	2 + 2	28 + 25	179 + 150	4	5	21
6055	200	139	299	4	28	179	4	5	21
6065	200	163	361	2 + 2	34 + 28	225 + 179	6	5	21
6075	250	175	373	4	34	225	6	5	21
6080	250	193	428	2 + 2	42 + 34	272 + 225	6	5	21
6090	250	209	444	4	42	272	6	5	21

Table 15

ELECTRICAL DATA

Power Supply : 380V/3PH/60Hz

Model	Unit Characteristic			Compressor			Condenser Fan Motor		
APCL	MFA	MCA	ICF	QTY	RLA	LRA	QTY	FLA	LRA
6006	32	18	105	1	13	100	1	1.5	4.5
6010	63	35	163	1	24	145	1	5.3	17.5
6012	80	40	156	1	28	138	1	5.3	17.5
6014	100	51	209	1	36	196	2	3.1	9.6
6020	100	65	192	2	24	145	2	5.3	17.5
6024	100	74	189	2	28	138	2	5.3	17.5
6028	160	97	260	2	36	196	3	5.3	17.5
6035	160	113	351	2	43	280	3	5.3	17.5
6040	200	128	421	1 + 1	56 + 43	353 + 280	4	3.7	13.7
6045	200	147	442	2	56	353	4	5.3	17.5
6050	200	158	321	2 + 2	36 + 28	196 + 138	4	5.3	17.5
6055	250	174	337	4	36	196	4	5.3	17.5
6065	250	201	439	2 + 2	43 + 36	280 + 196	6	5.3	17.5
6075	250	215	453	4	43	280	6	5.3	17.5
6080	315	244	539	2 + 2	56 + 43	353 + 280	6	5.3	17.5
6090	315	270	565	4	56	353	6	5.3	17.5

Table 16

Power Supply : 220V/3PH/60Hz

Model	Unit Characteristic			Compressor			Condenser Fan Motor		
APCL	MFA	MCA	ICF	QTY	RLA	LRA	QTY	FLA	LRA
6006	63	34	172	1	25	164	1	2.5	7.5
6010	100	62	269	1	42	239	1	9	29.7
6012	125	77	330	1	54	300	1	9	29.7
6014	160	85	362	1	59	340	2	5.4	16.7
6020	160	113	320	2	42	239	2	9	29.7
6024	200	140	393	2	54	300	2	9	29.7
6028	250	160	447	2	59	340	3	9	29.7
6035	315	212	635	2	82	505	3	9	29.7
6040	315	225	730	1 + 1	94 + 82	605 + 505	4	6.4	23.7
6045	400	248	756	2	94	605	4	9	29.7
6050	400	277	564	2 + 2	59 + 54	340 + 300	4	9	29.7
6055	400	287	574	4	59	340	4	9	29.7
6065	500	357	780	2 + 2	82 + 59	505 + 340	6	9	29.7
6075	500	403	826	4	82	505	6	9	29.7
6080	630	430	938	2 + 2	94 + 82	605 + 505	6	9	29.7
6090	630	454	962	4	94	605	6	9	29.7

Table 17

Legend

MFA Maximum Fuse Amps (for fuse sizing), complies with NEC Article 440-22 & 430-52.

MCA Minimum Circuit Amps.(for wire sizing), complies with NEC article 440-33.

ICF Maximum Instantaneous Current Flow

RLA Rated Load Amps. (at worst operating condition)

LRA Locked Rotor Amps

FLA Full Load Amps

Note :
Voltage imbalance not to exceed ± 2 % of the rated voltage

Typical Wiring Diagram

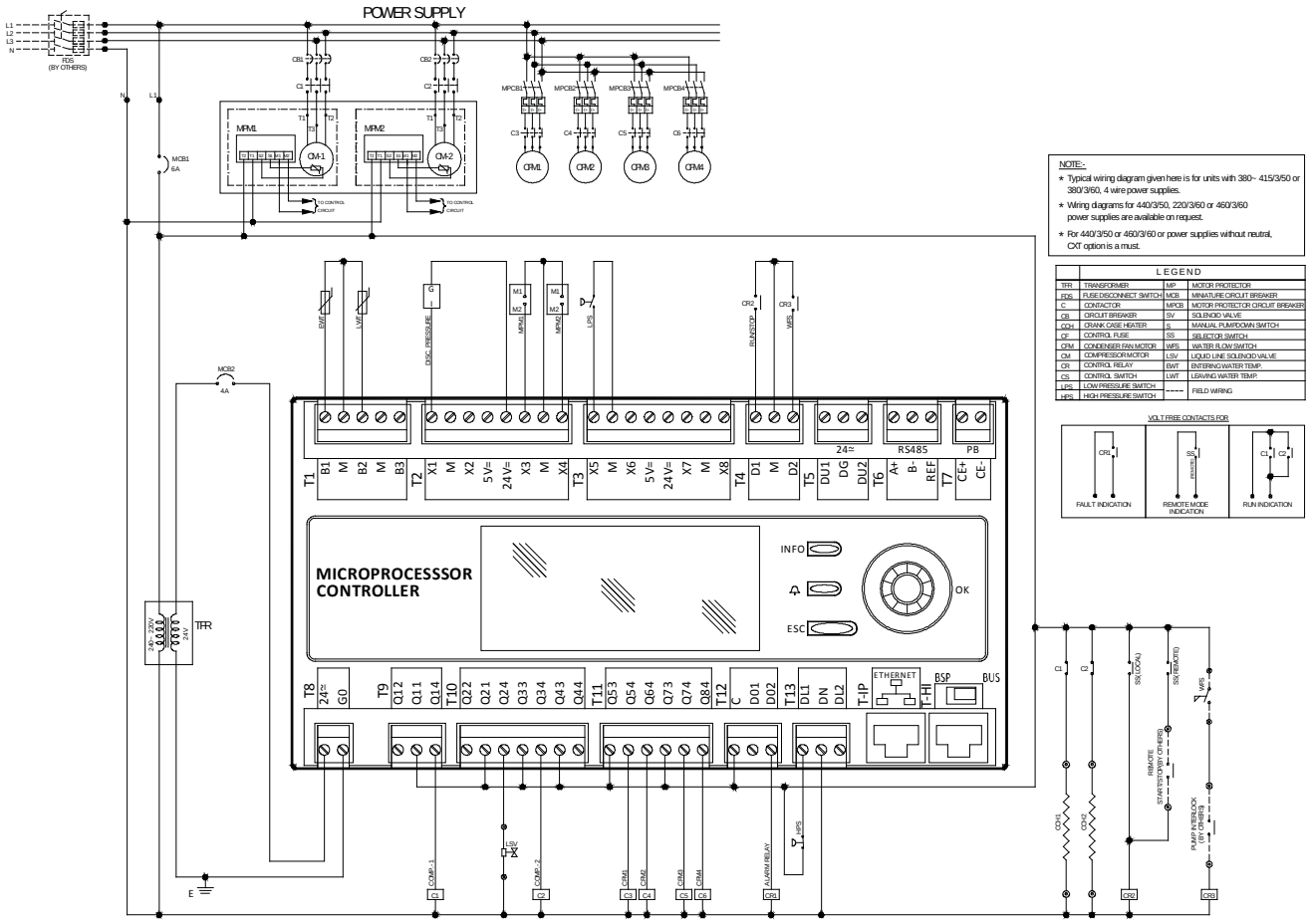

Power Entry Connections

All APCL units are with single point power entry.

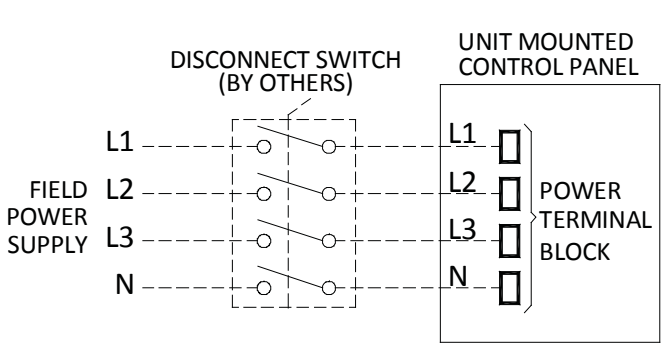

Standard Power Connection

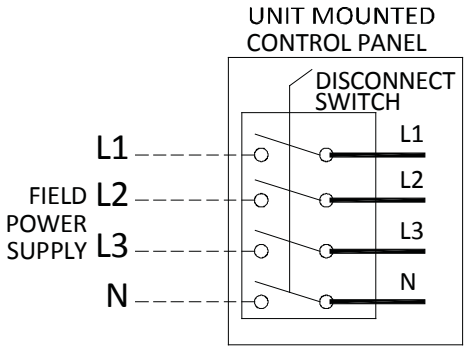

Power Connection with Optional Isolator

Dimensional Data

APCL Models - 5005-5010 & 6006-6012

MODEL APCL-	H	W	L	C	D	CH.W. IN/OUT Ø
5005	52.16 1325	34 864	45 1143	8 203	26.87 682	1 1/4 MPT [32]
5008	58.98 1498	42 1067	56 1422			
5010			62 1575	8.19 208	26.69 678	1 1/2 MPT [38]
6006	52.16 1325	34 864	45 1143	8 203	26.87 682	1 1/4 MPT [32]
6010	58.98 1498	42 1067	56 1422	8.19 208	26.69 678	1 1/2 MPT [38]
6012			62 1575			

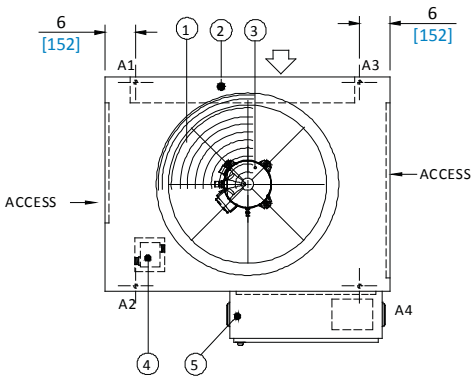

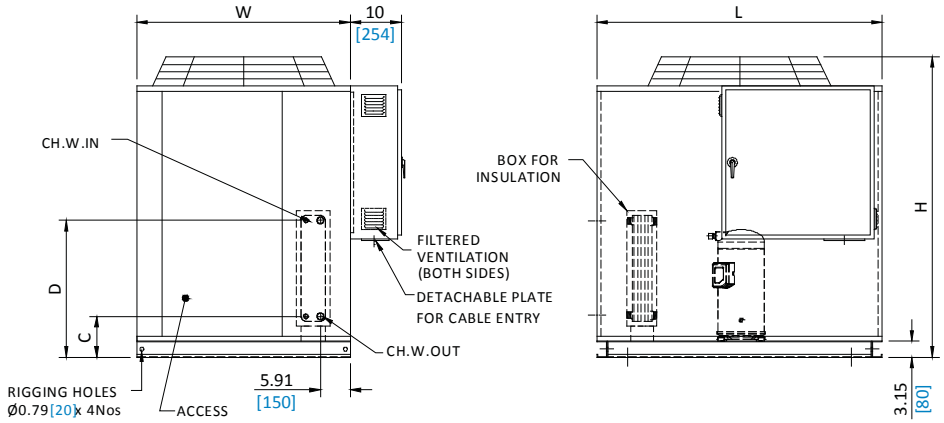

APCL Models - 5012 & 6014

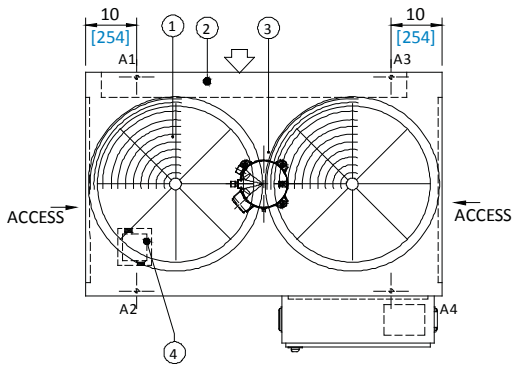

LEGEND

1. CONDENSER FAN
2. CONDENSER COIL
3. COMPRESSOR
4. PLATE HEAT EXCHANGER
5. CONTROL PANEL

ALL DIMENSIONS ARE IN INCHES [MM]

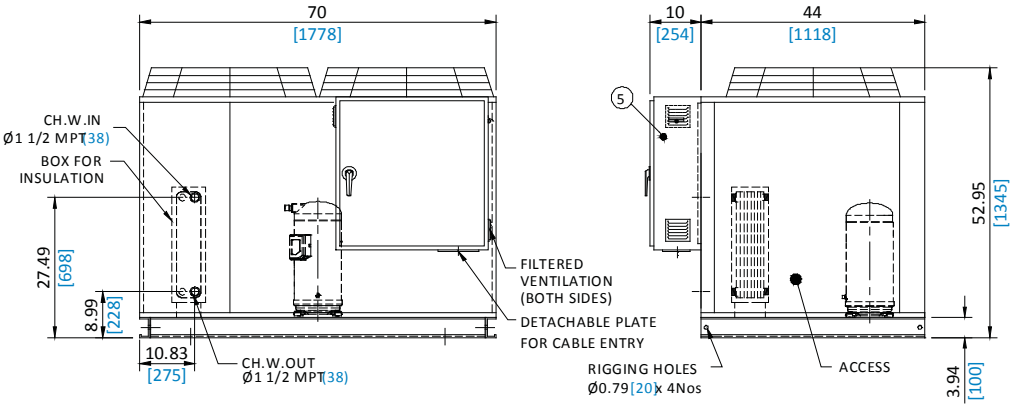

APCL Models - 5016, 5020 & 6020, 6024

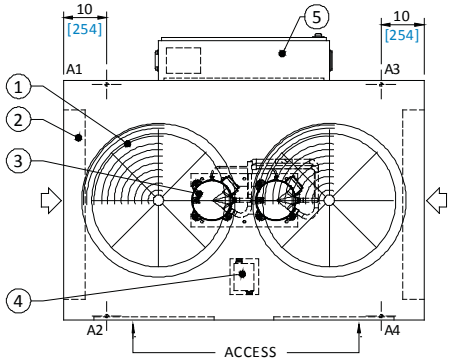

MODEL APCL-	W	A	C	D	CH.W. IN/OUT Ø
5016	56 1422	43.31 [1100]	9 228	27.5 698	1 1/2 MPT [38]
5020	62 1575				
6020	56 1422				
6024	62 1575	45.28 [1150]	9.24 235	27.19 691	2 1/2 MPT [63]

LEGEND

1. CONDENSER FAN
2. CONDENSER COIL
3. COMPRESSOR
4. PLATE HEAT EXCHANGER
5. CONTROL PANEL

ALL DIMENSIONS ARE IN INCHES [MM]

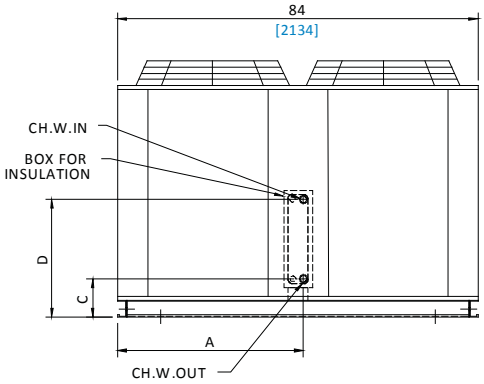

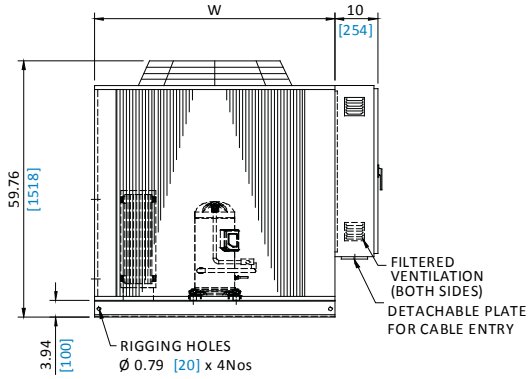

APCL Models - 5024, 5030 & 6028, 6035

MODEL APCL-	W	H	C	D
5024	76 1930	62.52 1588	10.23 260	28.18 716
5030	80 2032	74.53 1893		
6028	76 1930	62.52 1588	10.38 264	28.02 712
6035	80 2032	74.53 1893		

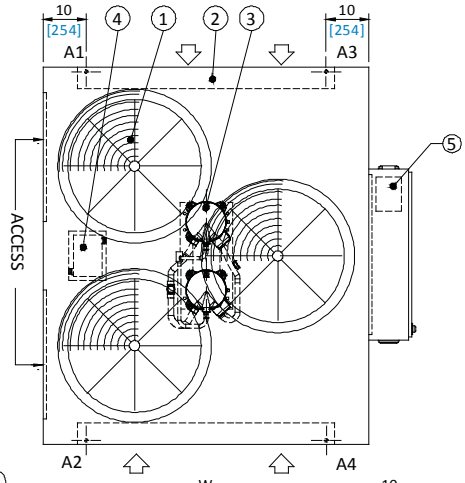

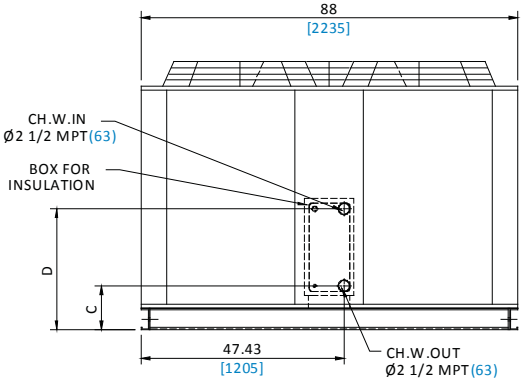

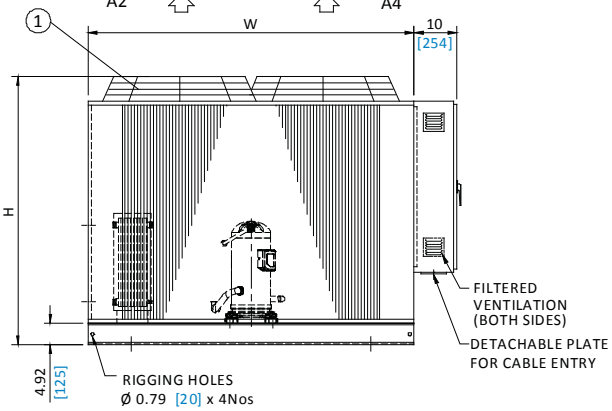

APCL Model - 5035, 5038 & 6040, 6045

MODEL APCL-	H
5035	77.76 1975
5038	85.75 2178
6040	77.76 1975
6045	85.75 2178

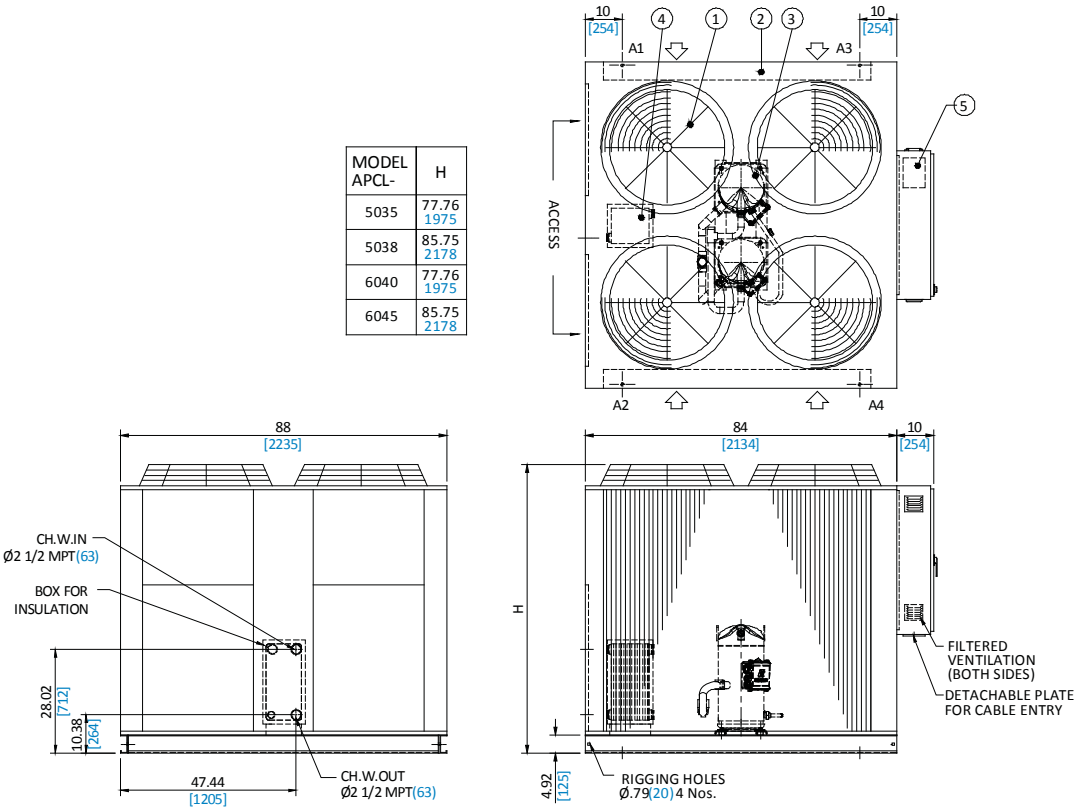

APCL Models - 5042, 5046 & 6050, 6055

LEGEND

1. CONDENSER FAN
2. CONDENSER COIL
3. COMPRESSOR
4. PLATE HEAT EXCHANGER
5. CONTROL PANEL

ALL DIMENSIONS ARE IN INCHES [MM]

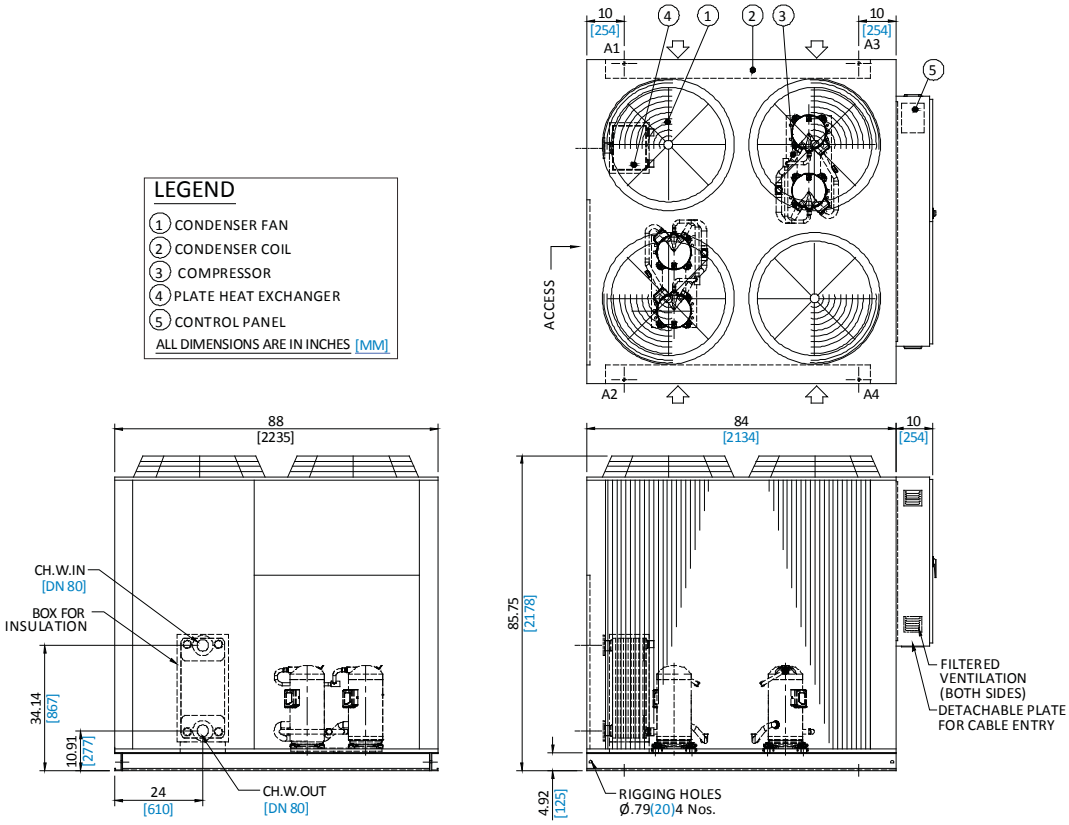

SKM Air Cooled Packaged Chillers
APCL Series - R22

APCL Models - 5055~5075 & 6065~6090

LEGEND
1. CONDENSER FAN
2. CONDENSER COIL
3. COMPRESSOR
4. PLATE HEAT EXCHANGER
5. CONTROL PANEL

ALL DIMENSIONS ARE IN INCHES [MM]

MODEL APCL-	H
5055	73.74 1873
5060	85.75 2178
5070	93.74 2381
5075	
6065	73.74 1873
6075	85.75 2178
6080	93.74 2381
6090	

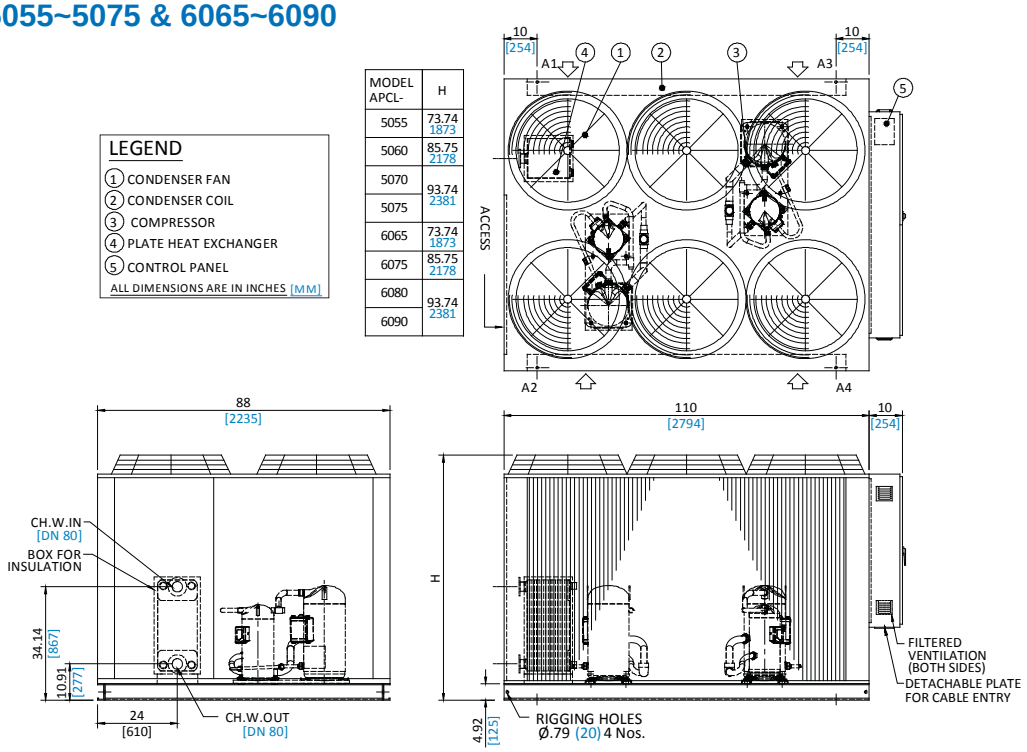

LOAD DISTRIBUTION ON MOUNTING POINTS

50 Hz

APCL Models	Units	Mounting Loads				Operating Weight
		A1	A2	A3	A4	
5005	lbs	156	157	151	165	629
	kg	71	71	68	75	285
5008	lbs	185	183	176	192	736
	kg	84	83	80	87	334
5010	lbs	223	200	209	211	843
	kg	101	91	95	96	382
5012	lbs	254	232	238	254	978
	kg	115	105	108	115	444
5016	lbs	336	307	336	307	1286
	kg	152	139	152	139	583
5020	lbs	385	330	385	330	1430
	kg	175	150	175	150	649
5024	lbs	496	496	457	457	1906
	kg	225	225	207	207	864
5030	lbs	675	675	627	627	2604
	kg	306	306	284	284	1181
5035	lbs	727	727	716	716	2886
	kg	330	330	325	325	1309
5038	lbs	821	821	804	804	3250
	kg	372	372	365	365	1474
5042	lbs	840	823	859	781	3303
	kg	381	373	390	354	1498
5046	lbs	842	825	861	783	3311
	kg	382	374	390	355	1502
5055	lbs	1102	1097	1122	997	4318
	kg	500	498	509	452	1958
5060	lbs	1255	1261	1286	1150	4952
	kg	569	572	583	522	2246
5070	lbs	1340	1344	1375	1223	5282
	kg	608	610	624	555	2395
5075	lbs	1366	1372	1403	1248	5389
	kg	620	622	636	566	2444

60 Hz

APCL Models	Units	Mounting Loads				Operating Weight
		A1	A2	A3	A4	
6006	lbs	156	157	151	165	629
	kg	71	71	68	75	285
6010	lbs	186	184	177	192	739
	kg	84	83	80	87	335
6012	lbs	224	203	209	211	847
	kg	102	92	95	96	384
6014	lbs	256	237	238	254	985
	kg	116	107	108	115	447
6020	lbs	338	313	338	313	1302
	kg	153	142	153	142	590
6024	lbs	389	351	389	351	1480
	kg	176	159	176	159	671
6028	lbs	525	525	475	475	2000
	kg	238	238	215	215	907
6035	lbs	692	692	629	629	2642
	kg	314	314	285	285	1198
6040	lbs	733	733	717	717	2900
	kg	332	332	325	325	1315
6045	lbs	821	821	804	804	3250
	kg	372	372	365	365	1474
6050	lbs	840	823	859	781	3303
	kg	381	373	390	354	1498
6055	lbs	892	844	869	786	3391
	kg	405	383	394	356	1538
6065	lbs	1102	1097	1122	997	4318
	kg	500	498	509	452	1958
6075	lbs	1372	1362	1200	1061	4995
	kg	622	618	544	481	2265
6080	lbs	1340	1344	1375	1223	5282
	kg	608	610	624	555	2395
6090	lbs	1366	1372	1403	1248	5389
	kg	620	622	636	566	2444

Table 18

Installation & Application Data

Location/Space Requirements

Due to the vertical air flow discharge condenser design, it is recommended that certain precautions are to be taken before installation. There should be no obstruction on the air flow.

Orient the unit so that prevailing winds blow parallel to the unit length thus minimizing the effects on condensing pressure. If it is not practical to orient the unit in this manner, a wind deflecting shield should be considered.

It is also necessary to provide adequate clearance on all sides of the unit for service access and satisfactory performance. This will prevent excessive condensing temperatures and enhance system performance and operating economy.

Refer to Figure A for recommended clearance around chillers to avoid warm air recirculation or coil starvation.

Foundation

A flat concrete foundation or floor which can support the weight of the equipment must be provided as the unit must be level for proper operation and functioning of controls.

Vibration Isolation

Under certain critical conditions it is recommended that vibration isolators of rubber-in-shear or spring type be installed under the base.
The isolators must be designed for the operating weight of the unit. For operating load points refer to the load distribution table. Correct selection of types of isolators depends upon application and structure.

To further reduce the transmission of vibration, it is recommended that flexible water connections suitable for the system pressure be installed on the water inlet and outlet connections of the chiller. For critical applications or locations, services of a noise and vibration expert is recommended.

Recommended Clearances

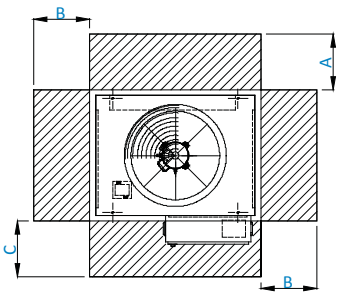

APCL 5005 ~ 5010
APCL 6006 ~ 6012

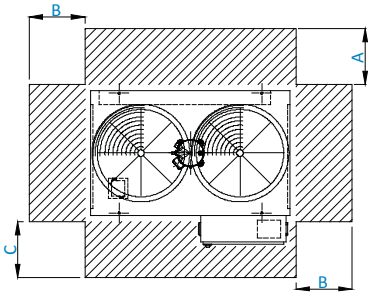

APCL 5012
APCL 6014

APCL		A	B	C
5005	6006	48	60	46
5008	6010			
5010	6012			
5012	6014		70	56
5016	6020			
5020	6024			
5024	6028			
5030	6035	72		
5035	6040		78	
5038	6045			
5042	6050			50
5046	6055			
5055	6065		102	
5060	6075	80		
5070	6080			
5075	6090			

ALL DIMENSIONS ARE IN INCHES

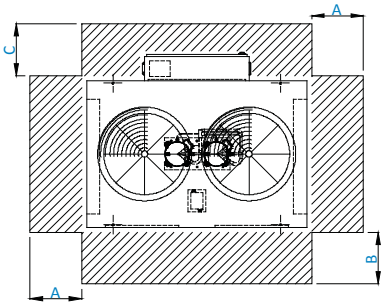

APCL 5016 & 5020
APCL 6020 & 6024

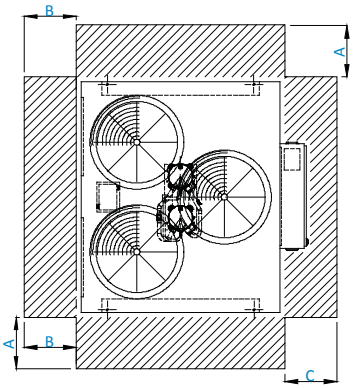

APCL 5024 & 5030
APCL 6028 & 6035

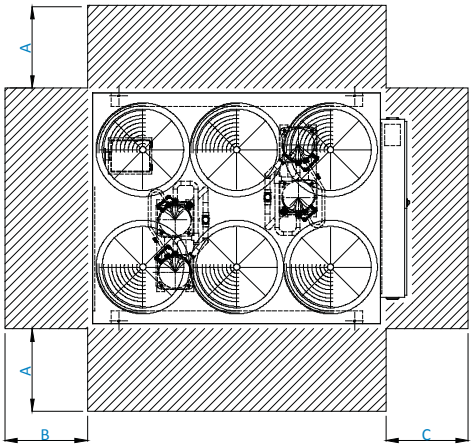

APCL 5035 ~ 5075
APCL 6040 ~ 6090

Figure A

Water Piping Practices

SKM suggests abiding by the local authorities' chilled water piping recommendations and practices as they can provide the installer the building and safety codes required for the installation.

Water piping should be designed to have a minimum number of bends and horizontal piping levels. Below are the following components it should have.

1. Temperature and pressure gauges in entering and leaving chiller water piping for unit servicing and commissioning. Pressure gauges must be installed on the same level.

2. Vibration eliminators in entering and leaving chilled water piping to lessen the sound and vibration transmitted to the building.

3. Pipe strainer in the evaporator entering piping to protect the BPHE from particles blocking the channels causing low performance, increased pressure drop and risk of freezing. If the media contain particles larger than 1 mm, a strainer with a size of 16-20 mesh (number of openings per inch) should be installed before the heat exchanger.

4. Water flow switch in the leaving chilled water piping, wired to the terminals provided in the control panel, to make sure that it has sufficient flow of water in the evaporator. This will prevent the evaporator from freezing up when the water flow is interrupted and avoid compressor slugging on start-up

5. To isolate the unit from the piping system when servicing or during maintenance, install a shut off valve on the entering and leaving chilled water piping.

6. Expansion Tank provides additional space in the chilled water piping system as temperature rises and furthermore, it maintains a positive pressure within the working limitations of the system.

7. Air Vents at high points in the chilled water system to bleed air from the system.

8. Vapor barrier on the outside of the insulation to avoid condensation in the cold surface of the pipe that may cause damage on the building structure. A thorough leak test should be made before insulating the pipe.

Flush all chilled water piping before making the final connection to the unit. SKM recommends hiring services of water treatment specialist to determine the type of necessary treatment. Improper or untreated chilled water leads to scaling, erosion, corrosion or algae that can cause inefficient operation and BPHE damage. SKM will not be liable for damages caused by improper or untreated chilled water.

Unit Sizing

It is strongly recommended to size the chiller for the present load. For future expansion, it is recommended to install another chiller to meet the additional load demand.

Over sizing of chillers by more than 10% at design conditions must be avoided. Over sizing causes energy inefficiency (more power consumption), erratic system operation and shortened compressor life due to excessive cycling of compressors.

TYPICAL PIPING FOR BPHE EVAPORATOR

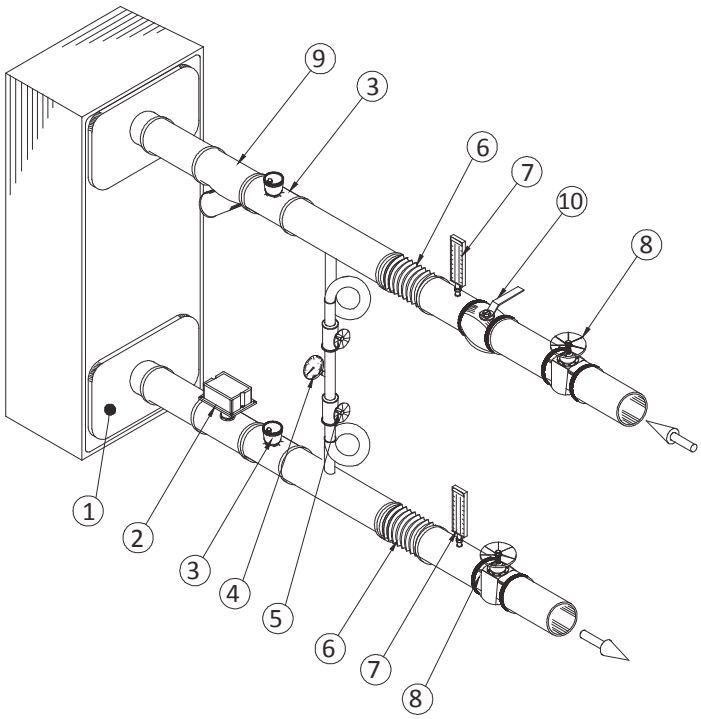

Figure B

1. HEAT EXCHANGER
2. WATER FLOW SWITCH
3. VENT
4. PRESSURE GAGE
5. SHUT OFF VALVES
6. VIBRATION ELIMINATOR
7. THERMOMETERS
8. GATE VALVE
9. STRAINER
10. BALANCING VALVE

GUIDE SPECIFICATIONS

GENERAL

Unit shall be micoprocessor controlled, shall have at least one refrigerant circuit consist of a hermetic scroll compressor(s), air cooled condenser, evaporator, interconnecting refrigerant piping, safety devices and accessories.
Unit shall be factory assembled, leak tested, evacuated and completely charged with refrigerant R - 22. All factory wiring and piping shall be contained within the machine enclosure.
All electrical components shall be protected from the weather.
Unit shall be rated in accordance with AHRI - 550/590. Each machine shall be capable of operating satisfactorily in a wide range of ambient air temperatures ranging from 50°F (10°C) to 125°F (52°C).
Unless indicated otherwise on electrical wiring diagram, each unit shall be factory equipped to connect to only one electrical power feeder with the necessary circuit breakers, if so specified.
Unit shall be mounted on anti vibration isolators flexible enough to dampen any vibrations.
Unit shall be manufactured in ISO - 9001:2000 and 14001:2004 accredited facility.

COMPRESSOR

Compressor shall be hermetically sealed, compact high efficiency and low noise scroll type. These compressors are refrigerant gas cooled, furnished with advanced scroll temperature protection or internal motor protection.

EVAPORATOR

Evaporators shall be with Brazed Plate Heat Exchanger (BPHE). Brazed plate heat exchanger's channel plates, refrigerant and water connections shall be constructed from stainless steel with pure copper as brazing material. The design and assembly process shall comply with Europe Pressure Equipment Directive PED 97/23/EC and maximum working pressure of water side shall be 363 psig (2500 kPa) and refrigerant side shall be 392 psig (2700 kPa). Evaporator shall be 1 or 2 independent refrigerant circuits.
The evaporater shall be insulated with 1" (25mm) thick flexible closed cell insulation with a maximum K factor of 0.28 Btu.in/ft^2.hr.°F (0.040 W/m.ºK)

CONDENSER COIL

Condenser coil shall be air cooled and shall be constructed of seamless copper tubes, maximum 4 rows deep, 3/8" (9.52 mm) O.D. and mechanically bonded to the wavy type aluminum fins. Fins spacing shall be maximum 12/14 FPI (2.1mm/1.8mm). Slit fins shall not be accepted.
Precoated fins shall be used for saline and corrosive environment (if so specified). Integral sub cooling circuit in each coil shall be provided to increase the chiller cooling capacity, without additional operating cost. The coils shall be tested against leakage by air pressure of 450 psig (3100 kPa) under water.

CONDENSER FANS & MOTORS

The machine shall be furnished with direct driven propeller type discharging air upward condenser fans. Fans shall be constructed of corrosion resistant blades such as heavy gauge aluminum. The fan and drive shall be held in proper alignment. Fan assemblies shall be provided with heavy gauge, rust resistant steel. The fan assembly shall be protected with an acrylic coated steel wire fan guard. All condenser fans shall be individually statically and dynamically balanced for vibration free operation.

Condenser fan motor shall be Totally Enclosed Air Over (TEAO), 3-phase type, 6 poles with Class F insulation , Class B temperature rise and IP55 protection. Also, Motor shall be with permanently lubricated bearings and inherent corrosion resistance shaft. Condenser fan motors shall be provided with individual 3 pole contactor rated for AC3 duty operation & motor protector circuit breaker for short circuit, over current protection & isolation.

REFRIGERATION CIRCUITS

Refrigeration circuits piping shall be fabricated from ACR grade copper pipes and each refrigeration circuit shall include a removable core filter drier, liquid line solenoid valve, thermostatic expansion valve, shut off valve and sight glass.
Suction line shall be insulated with ½" (13mm) wall thickness closed cell pipe insulation with maximum k factor 0.26 Btu.in/ft^2.hr.°F (0.038 W/m.ºK).

CASING

Machine casing shall be made of heavy gauge zinc coated galvanized steel sheets conforming to JIS-G 3302 and ASTM-A 635. To provide an extremely tough, scratch resistance , excellent anti-corrosive protection, fabricated steel shall be thoroughly de-greased and then phosphatized before application of an average 60 micron backed electrostatic polyester dry powder coating in RAL 7032 color scheme. This finish shall pass 1000-hour, 5% salt spray test at 95°F (35°C) and 95% relative humidity (ASTM B 117).
Machine casing shall be provided with access doors for easy service and maintenance and painted steel wire guard for compressors section.
The machine shall be fully assembled on welded rigid structural steel skid painted with one coat primer and minimum one coat of rust-preventing black enamel.

CONTROL PANEL & CONTROLS

The unit mounted chiller control panel enclosure shall be fabricated out of heavy gauge sheet steel in phosphatized, powder coated baked finish and shall confirm to IP-54 protection as per guide lines in IEC-529. Control Panels shall be with hinged doors and key fasteners shall be provided for easy access and security. Panels shall be factory wired in accordance with NEC-430&440, labeled, tagged and shall feature 220/240 single phase controls and shall include the following as minimum:

- All compressors shall be with DOL Starting.
- Individual compressor & condenser fan motor contactors.
- Circuit Breakers for compressor & condenser fan motors.
- MCB for Control Circuit.
- Remote/Local selector switch.
- Microprocessor Control Boards.
- Control Relays.
- Power and Control Terminal Blocks.

MICROPROCESSOR CONTROL

Chillers shall be equipped with a full function microprocessor based controller as a standard feature. The controller shall be factory programmed for the control of compressors and condenser fans. The controller shall come with a built in keypad and display for simple but meaningful man machine interface. This controller shall provide complete operational control for the chiller and shall have built-in auto diagnostic capability that can signal normal operation or alarm conditions as well as shutting down the chiller or system if necessary.

The Main Features of the controller shall be follows:

- Built in LCD display with back light.
- Built in keypad.
- Battery backed up built in real time clock.
- Multiple authorization level to provide tight security for the control system.
- Run hours for the compressors.
- Automatic Lead/Lag of the compressors.
- Capacity control based on leaving water temperature.
- Alarm history.
- Remote Start/Stop facility from an external control system.
- Common fault, run and auto mode indication through volt free contact.

DISPLAY INFORMATION

Chiller shall be with display which allows the operator to access different parameters of the chiller. Operator shall be able to view and change the chiller parameters. The display information shall include:

- Status
- Outputs
- Inputs
- Alarms
- Set points
- Password

Controller shall monitor all the safeties related to the chiller and shall make the necessary protections, by shutting down the entire chiller or the effected circuit. The protection shall include:

- Low suction pressure.
- High discharge pressure.
- High compressor motor temperature.
- Freeze.
- Chilled water flow loss.
- Sensor faults.
- Compressor short cycling.

The controller shall support the major BMS protocols such as BACnet, Modbus & LON by adding extra hardware.

اجهزة تكييف هواء
AIR CONDITIONING EQUIPMENT

HEAD OFFICE

P.O Box: 6004
Sharjah, United Arab Emirates
Tel: +971 6 5347347
Fax: +971 6 5349292
Email: sales@skm.ae

Spare Parts Division

Sharjah, United Arab Emirates
Tel: +971 6 5347347
Fax: +971 6 5349292
Email: spareparts@skm.ae

Service Centre

Sharjah, United Arab Emirates
Tel: +971 6 5347347
Fax: +971 6 5349292
Email: aftersales@skm.ae

REGIONAL OFFICES

UAE

Abu Dhabi P.O Box: 27788
Abu Dhabi, United Arab Emirates
Tel: +971 2 6445223
Fax: +971 2 6445145
Email: abudhabisales@skm.ae

Al Ain Al Ain, United Arab Emirates
Tel: +971 3 7619921
Fax: +971 3 7619941
Email: alainsales@skm.ae

Dubai P.O Box: 98822
Dubai, United Arab Emirates
Tel: +971 4 2940900
Fax: +971 4 2940029
Email: dubaisales@skm.ae

Kuwait

P.O Box: 1215-PC 15463
Dasman, Kuwait
Tel: +965 2 2492200
Fax: +965 2 2494400
Email: kuwaitsales@skm.ae

Saudi Arabia

AL Messila HVAC Equipment Factory
(Part of SKM A/C factory in
Saudi Arabia)
Saudi Arabia, Eastern provenance
AD Dammam
2nd industrial city
Abqiq main road Hail Street
Tel: +966 3 8123332 / 4 / 5
Fax: +966 3 8123337 / +966 3 8123092

Egypt

9 Mosadak Street,
3rd floor, Dokki, Giza, Egypt
Tel: +20 2 37619617 / +20 2 37621974
Fax: +20 2 37621973
Email: egyptsales@skm.ae

Algeria

Aissat Idir (EX-ENMA) City
Bldg1, Flat 2, Dar El Beida Algiers,
Algeria
Tel: +213 21 508197
Fax: +213 21 508197
Email: algeriasales@skm.ae

DISTRIBUTORS

Saudi Arabia

info@fawazgroup.com

Al Khobar
Fawaz Ref. & Air Conditioning Co.
P.O Box: 1189
Al Khobar, Saudi Arabia
Tel: +966 3 8598666
Fax: +966 3 8598520
Email: abarbarawi@fawazgroup.com

Jeddah
Fawaz Ref. & Air Conditioning Co.
P.O Box: 13218
Jeddah, Saudi Arabia
Tel: +966 2 6691848
Fax: +966 2 6608316
Email: jamal@fawazgroup.com

Riyadh
Fawaz Ref. & Air Conditioning Co.
P.O Box: 85123
Riyadh, Saudi Arabia
Tel: +966 1 4794499
Fax: +966 1 4785354
Email: saleem@fawazgroup.com

Jordan

Ideal A/C Systems Co. L.L.C
Al Gardenz Street, Building 111,
Al Bakri Complex
P.O Box 5502 Amman, Jordan 11953
Tel: +962 6 5538640
Fax: +962 6 5538641
Email: tariq@idealac.com

Qatar

Mannai Trading Co. WLL
P.O Box: 76
Doha, Qatar
Tel: +974 4 4558787 / +974 4 4558788
Fax: +974 4 4558781
Email: dohasales@skm.ae
HVAC@mannai.com.qa

Iraq

Al Rawbitt Al Iraqia Co.
Erbil – Bagdad – Basra
Tel: +964 7507441111
+964 7711117776
+965 99608916
Email: info@alrawabitt.com

Iran

Hivasanat 4th Floor, Building. No. 74,
5th Golestan Ave.
Abazar Blvd Ayatollah Kashani Exp.,
Tehran
Tel: +98 21 44951422 / 23
Fax: +98 21 44952135
Email: info@hivasanat.com

Kuwait (for Unitary Products Only)

British Link Kuwait (BLK)
P.O Box: 53054 Al Nuzha
Tel: +965 1820099
Fax: +965 22465005
Email: rawad@blk.com.kw

visit us at www.skm.ae

095/2013
Supersedes # 095/2012